Tolomatic
EXCELLENCE IN MOTION®

TKS & TKB ACTUATORS

SCREW DRIVE & BELT DRIVE

ENDURANCE TECHNOLOGY℠

LINEAR SOLUTIONS MADE EASY

Tolomatic TKS & TKB Electric Rodless Actuators

High Precision Rodless Actuators

The TKS and TKB linear table style actuators are designed for applications carrying moderate load and requiring high precision in parameters such as flatness, straightness and accuracy. Both the TKS and TKB actuators utilizes two parallel profiled rails with four recirculating ball linear guides to provide consistent and precise performance. Built-to-order in stroke lengths up to 2.4 m [96 inches].

A Comparison of Screw Drive Actuators

	TKS	***B3S***	***MXE-S***	***MXE-P***
				
Features:	Superior rigidity, high moment load capacities	High load and bending moment capacities	Basic guidance and support	High load and bending moment capacities
Load up to: *(with options)*	6.7 kN [1,500 lbf]	35.6 kN [8,000 lbf]	4.6 kN [1,040 lbf]	11.5 kN [2,584 lbf]
Thrust up to:	14.5 kN [3,260 lbf]	12 kN [2,700 lbf]	19.1 kN [4,300 lbf]	19.1 kN [4,300 lbf]
Speed up to:	1.5 m/sec [60 in/sec]	1.5 m/sec [60 in/sec]	1.5 m/sec [60 in/sec]	1.5 m/sec [60 in/sec]
Stroke Length up to:	2.4 m [96 in]	4.5 m [179 in]	4.5 m [178 in]	4.5m [178 in]
Screw/Nut Type	Solid & Ball	Solid & Ball	Solid & Ball	Solid & Ball
	www.tolomatic.com *for complete information, search by literature number:*			
Literature Number:	*3600-4609*	*3600-4176*	*8300-4000*	*8300-4000*

(Not all models deliver ALL maximum values listed, i.e.: Maximum thrust may not be available with maximum speed)

A Comparison of Belt Drive Actuators

	TKB	***B3W***	***MXB-U***	***MXB-P***
			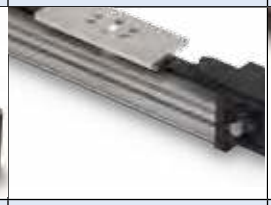	
Features:	Superior rigidity, high moment load capacities	High load and bending moment capacities	Basic thrust, requires external guidance and support	High load and bending moment capacities
Load up to: *(with options)*	6.7 kN [1,500 lbf]	35.6 kN [8,000 lbf]	NA	11.5 kN [2,584 lbf]
Thrust up to:	1.1 kN [245 lbf]	1.4 kN [325 lbf]	1.9 kN [418 lbf]	1.9 kN [418 lbf]
Speed up to:	2.5 m/sec [100 in/sec]	5.1 m/sec [200 in/sec]	5.1 m/sec [200 in sec]	3.9 m/sec [150 in/sec]
Stroke Length up to:	2.4 m [96 in]	5.3 m [207 in]	5.8 m [230 in]	5.8 m [230 in]
	www.tolomatic.com *for complete information, search by literature number:*			
Literature Number:	*3600-4609*	*3600-4176*	*8500-4000*	*8500-4000*

(Not all models deliver ALL maximum values listed, i.e.: Maximum thrust may not be available with maximum speed)

TKS & TKB Applications

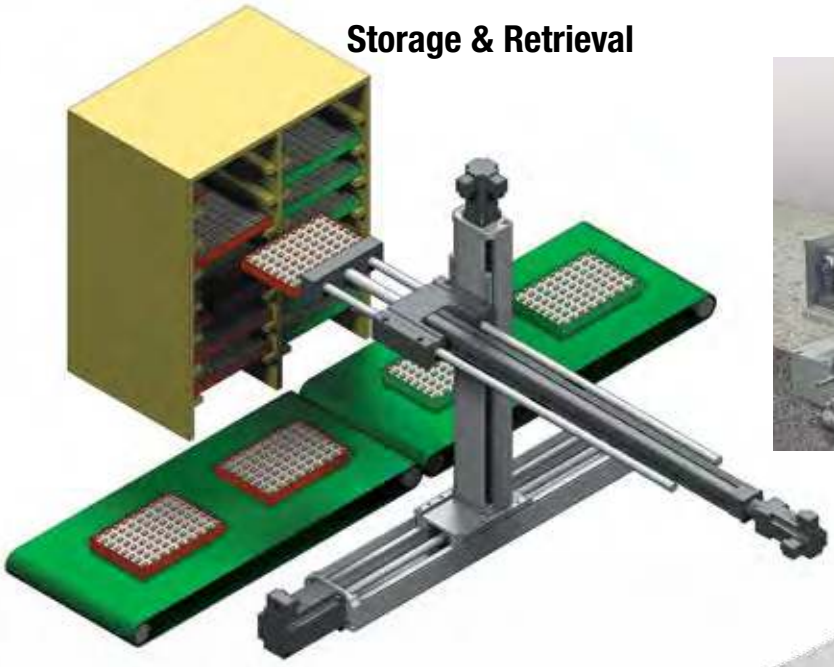

Storage & Retrieval

Inspection & Measurement

Custom Two Direction TKS

CONTENTS

TKS

TKB

- Animation
- Assembly machinery
- Automotive
- Cosmetics
- Cycle testing
- Inspection & measurement
- Laser positioning
- Machine tools
- Material handling
- Medical equipment
- Packaging equipment
- Pick & place
- Precision grinders
- Product test simulations
- Semiconductor
- Stage motion control
- Table positioning
- Tension control
- Test stands
- Water jet control
- Wave generation
- and many more

Semiconductor Inspection

TKS PRECISION SCREW DRIVE ACTUATOR

ENDURANCE TECHNOLOGY℠

Endurance Technology features are designed for maximum durability to provide extended service life.

The TKS linear table style actuator is designed for applications carrying moderate load and requiring high precision in parameters such as flatness, straightness and accuracy. The TKS actuator utilizes two parallel profiled rails with four recirculating ball linear guides to provide consistent and precise performance. Built-to-order in stroke lengths up to 2.4 m [96 inches] with your choice of screw technology.

MULTIPLE SCREW TECHNOLOGIES YOU CAN CHOOSE:

- Solid nuts of engineered resins offer quiet performance at the lowest cost; anti-backlash available

- Ball nuts offer positioning accuracy and repeatability with longer life; low-backlash available

PRECISION MACHINED TABLE DESIGN

- A low profile design accommodates multiple mounting designs and assures a rigid and secure load

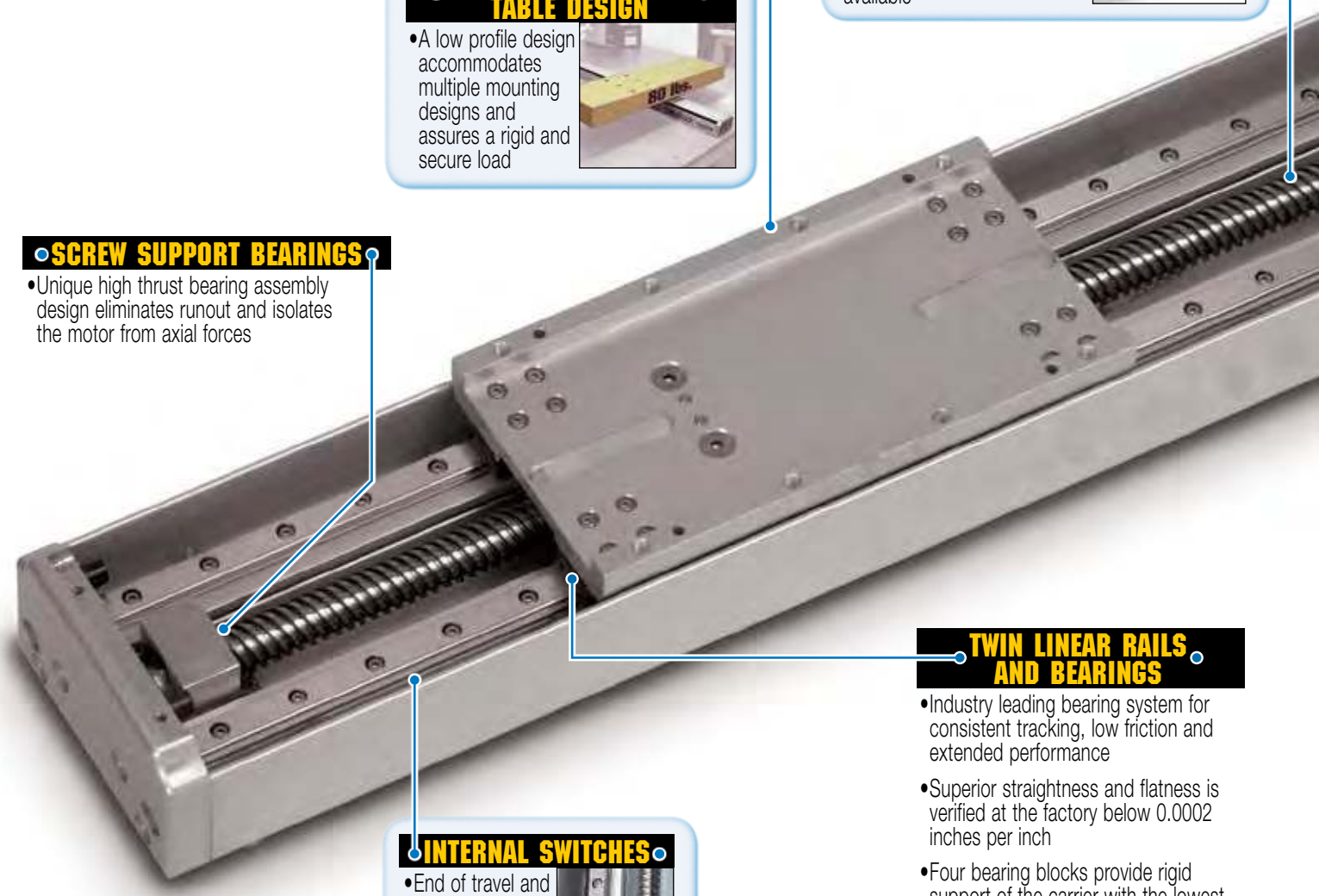

SCREW SUPPORT BEARINGS

- Unique high thrust bearing assembly design eliminates runout and isolates the motor from axial forces

TWIN LINEAR RAILS AND BEARINGS

- Industry leading bearing system for consistent tracking, low friction and extended performance
- Superior straightness and flatness is verified at the factory below 0.0002 inches per inch
- Four bearing blocks provide rigid support of the carrier with the lowest possible deflection

INTERNAL SWITCHES

- End of travel and home positioning sensors are integral into the body of the actuator for clean and easy management

...MAXIMUM DURABILITY

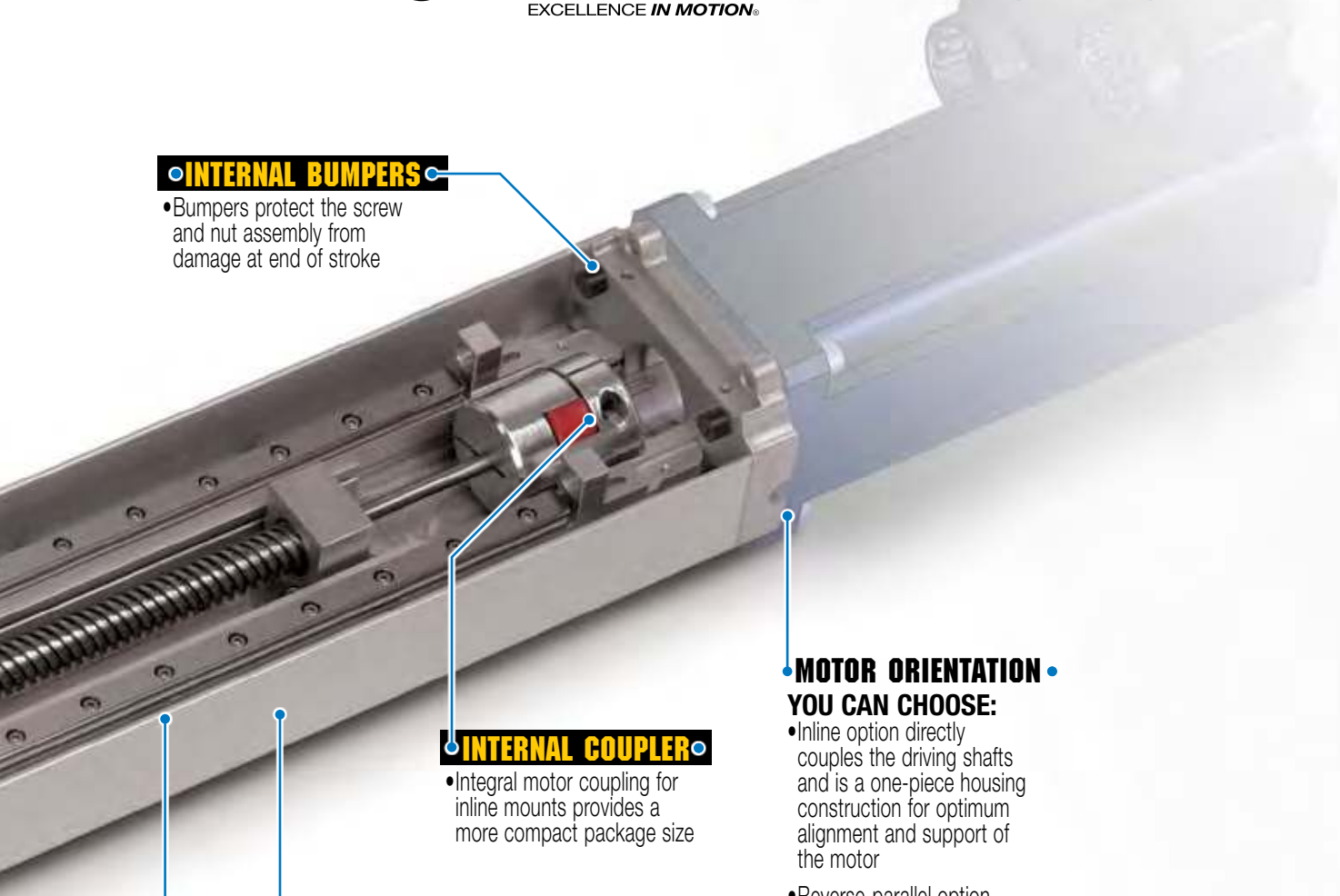

INTERNAL BUMPERS

- Bumpers protect the screw and nut assembly from damage at end of stroke

INTERNAL COUPLER

- Integral motor coupling for inline mounts provides a more compact package size

MOTOR ORIENTATION

YOU CAN CHOOSE:

- Inline option directly couples the driving shafts and is a one-piece housing construction for optimum alignment and support of the motor
- Reverse-parallel option minimizes the overall length and offers a 1:1 or 2:1 belt ratio

LIGHTWEIGHT ALUMINUM DESIGN

- Clear anodized extrusion design is optimized for rigidity and strength
- Mounting holes placed evenly throughout the stroke maintain rigidity

REMOVABLE COVER

- Provides rapid access to internal components and protects mechanisms from incidental damage

OPTIONS

CARRIER OPTIONS

- **AUXILIARY CARRIER** Doubles the load capacity and increases pitch and yaw bending moment capacities

SEALING OPTIONS

- **BELLOWS** provides additional protection of mechanical components in dirty environments

SWITCHES

Styles include: reed or hall-effect.
5 m potted cable with flying leads

TKB PRECISION BELT DRIVE ACTUATOR

ENDURANCE TECHNOLOGY℠

Endurance Technology features are designed for maximum durability to provide extended service life.

The TKB linear table style actuator is designed for high speed applications requiring high precision in parameters such as flatness and straightness. This unique actuator utilizes two parallel profiled rails with four recirculating ball linear guides to provide wide and stable mounting surface with consistent and precise performance. The TKB belt-driven actuator features speeds up to 2.5 m/sec. [100 in/sec.] and thrusts up to 1.1 kN [245 lbf]. Built-to-order in stroke lengths up to 2.4 m [96 inches].

MULTIPLE BELT TECHNOLOGIES YOU CAN CHOOSE:

- Polyurethane steel-cord reinforced HTD style belt (standard)
- Polyurethane Kevlar reinforced HTD style belt (Contact Tolomatic)

REMOVABLE COVER

- Provides rapid access to internal components and protects mechanisms from incidental damage

INTERNAL SWITCHES

- End of travel and home positioning sensors are integral into the body of the actuator for clean and easy management

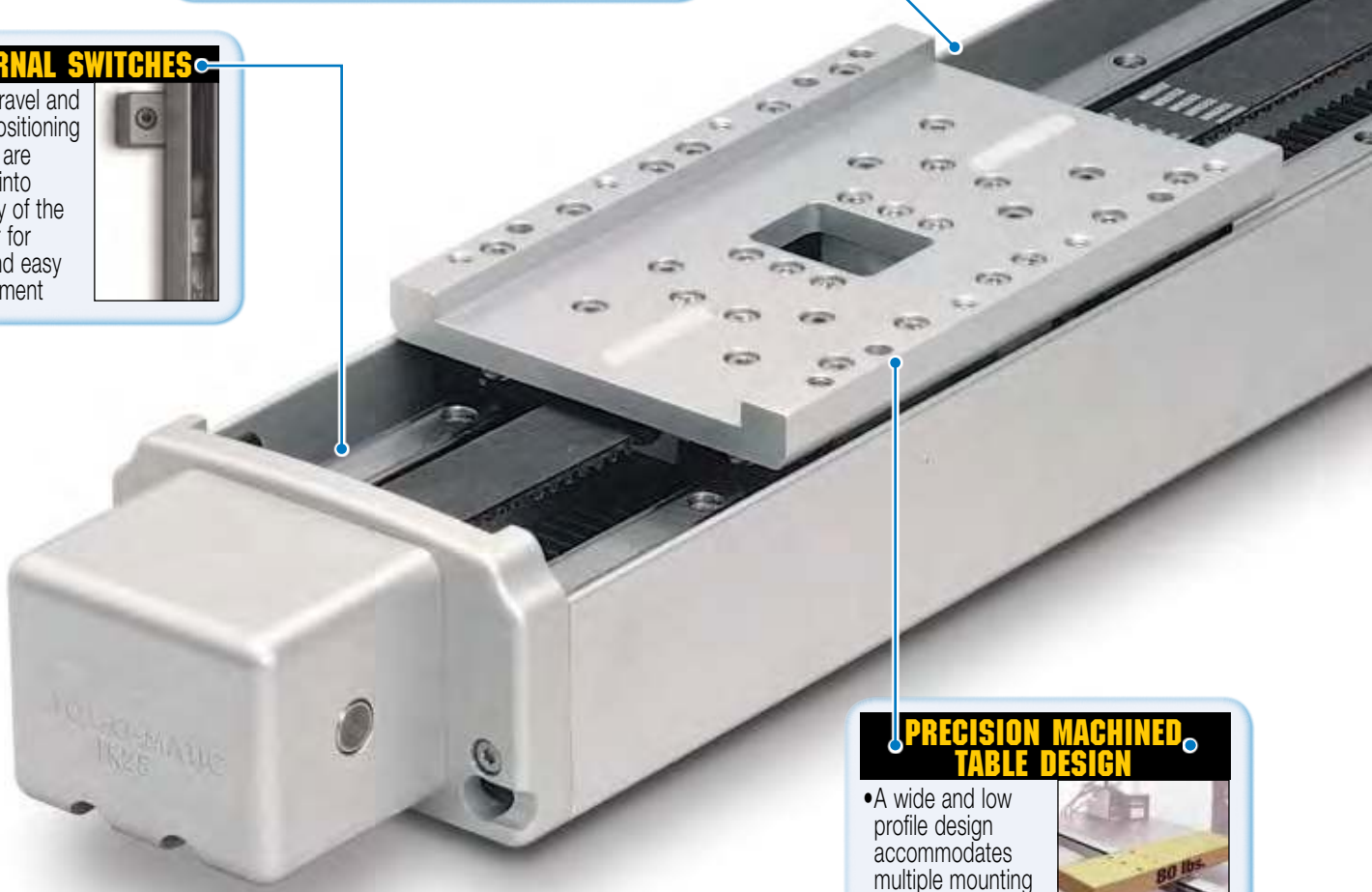

PRECISION MACHINED TABLE DESIGN

- A wide and low profile design accommodates multiple mounting designs and assures a rigid and secure load

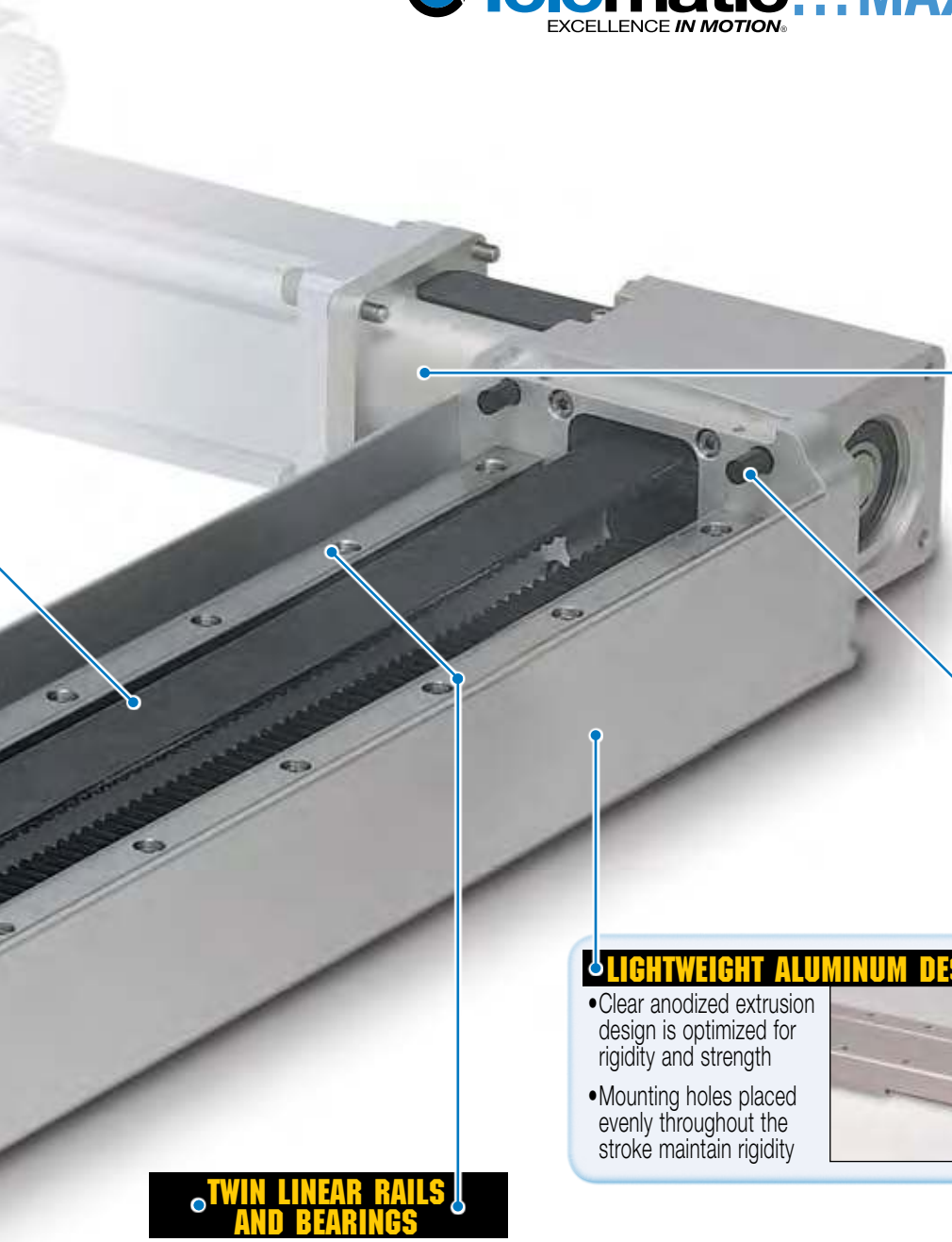

MOTOR ORIENTATION

YOU CAN CHOOSE:

- Direct drive option directly couples the driving shafts and is a one-piece housing construction for optimum alignment and support of the motor
- Reduction drive option offers the ability to reduce the reflected inertia and lower the motor torque requirements

EXTERNAL BUMPERS

- External bumpers, both ends, are standard
- Protect actuator and load from damage

LIGHTWEIGHT ALUMINUM DESIGN

- Clear anodized extrusion design is optimized for rigidity and strength
- Mounting holes placed evenly throughout the stroke maintain rigidity

TWIN LINEAR RAILS AND BEARINGS

- Industry leading bearing system for consistent tracking, low friction and extended performance
- Superior straightness and flatness is verified at the factory below 0.0002 inches per inch
- Four bearing blocks provide rigid support of the carrier with the lowest possible deflection

OPTIONS

CARRIER OPTIONS

- **AUXILIARY CARRIER** Doubles the load capacity and increases pitch and yaw bending moment capacities

SEALING OPTIONS

- **BELLOWS** provides additional protection of mechanical components in dirty environments

SWITCHES

Styles include: reed or hall-effect.
5 m potted cable with flying leads

TKS & TKB SPECIFICATIONS

BENDING MOMENTS AND LOADS

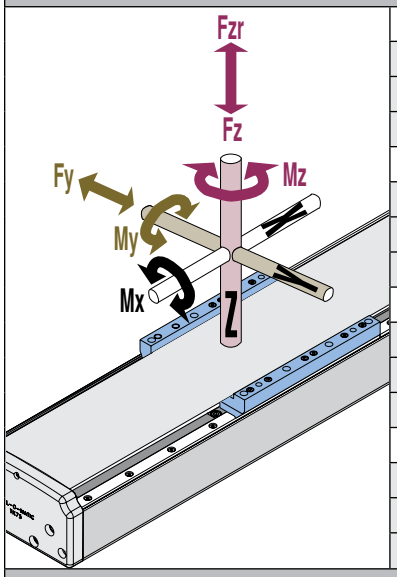

STANDARD CARRIER		MAX. BENDING MOMENTS AND LOADS*						
		Metric				U.S. Conventional		
Max. Dynamic Bending Moments		**10**	**25**	**75**		**10**	**25**	**75**
Mx (Roll)	*N-m*	*9.6*	*81.5*	*130.0*	lb-in	85	721	1,151
My (Pitch)	*N-m*	*26.4*	*114.6*	*166.9*	lb-in	234	1,014	1,477
Mz (Yaw)	*N-m*	*26.4*	*103.4*	*150.5*	lb-in	234	915	1,332
Max. Dynamic Loads								
Fy (Radial Load)	*N*	*445*	*1,113*	*3,338*	lb	100	250	750
Fz (Lateral Load)	*N*	*445*	*1,113*	*2,225*	lb	100	250	750
Fzr (Reverse Lateral Load)	*N*	*445*	*1,113*	*2,225*	lb	100	250	750
Max. Static Bending Moments								
Mx (Roll)	*N-m*	*19.2*	*141.3*	*225.6*	lb-in	170	1,251	1,997
My (Pitch)	*N-m*	*52.9*	*198.8*	*289.5*	lb-in	468	1,759	2,563
Mz (Yaw)	*N-m*	*52.9*	*179.4*	*261.1*	lb-in	468	1,588	2,311
Max. Static Loads								
Fy (Radial Load)	*N*	*890*	*1,931*	*5,789*	lb	200	434	1,301
Fz (Lateral Load)	*N*	*890*	*1,931*	*3,863*	lb	200	434	868
Fzr (Reverse Lateral Load)	*N*	*890*	*1,931*	*3,863*	lb	200	434	868

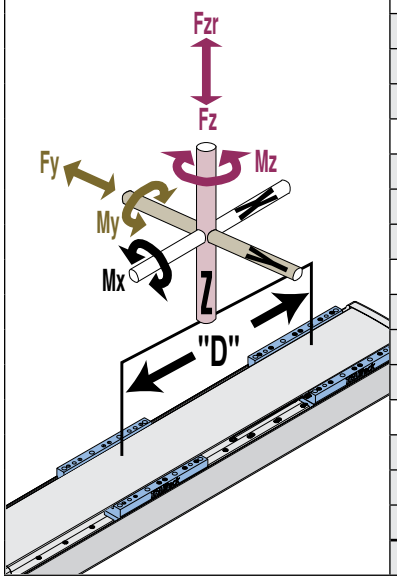

AUXILIARY CARRIER: Increases rigidity, load-carrying capacity and moments								
		Metric				U.S. Conventional		
Max. Dynamic Bending Moments**		**10DC**	**25DC**	**75DC**		**10DC**	**25DC**	**75DC**
Mx (Roll)	*N-m*	*19.2*	*162.9*	*260.1*	lb-in	170	1,442	2,302
My (Pitch)	*N-m*	*63.6*	*195.7*	*437.8*	lb-in	563	1,733	3,875
Mz (Yaw)	*N-m*	*63.6*	*195.7*	*437.8*	lb-in	563	1,733	3,875
Max. Dynamic Loads								
Fy (Radial Load)	*N*	*890*	*2,225*	*6,672*	lb	200	500	1,500
Fz (Lateral Load)	*N*	*890*	*2,225*	*6,672*	lb	200	500	1,500
Fzr (Reverse Lateral Load)	*N*	*890*	*2,225*	*6,672*	lb	200	500	1,500
Max. Static Bending Moments**								
Mx (Roll)	*N-m*	*38*	*283*	*451*	lb-in	340	2,502	3,994
My (Pitch)	*N-m*	*127*	*340*	*760*	lb-in	1,126	3,006	6,723
Mz (Yaw)	*N-m*	*127*	*340*	*760*	lb-in	1,126	3,006	6,723
Max. Static Loads								
Fy (Radial Load)	*N*	*1,780*	*3,863*	*11,583*	lb	400	868	2,603
Fz (Lateral Load)	*N*	*1,780*	*3,863*	*7,721*	lb	400	868	1,735
Fzr (Reverse Lateral Load)	*N*	*1,780*	*3,863*	*7,721*	lb	400	868	1,735
Min. Dimension 'D'	*mm*	*142.9*	*176*	*196.9*	in	5.63	6.93	7.75

**** Bending moments & load specifications are based on (5,000 KM) 200,000,000 linear inches of carrier travel.***

Breakaway torque will increase when using the Auxiliary carrier option. When ordering, determine your working stroke and enter this value into the configuration string. Overall actuator length will automatically be calculated.

Deflection Considerations: In applications where substantial Mx or My moments come into play, deflection of the cylinder tube, carrier and supports must be considered. The deflection factors shown in the Load Deflection charts, are based on cylinder mounted with tube supports at minimum recommended spacing. If more rigidity is desired, refer to the Auxiliary or Dual Carrier options.

***** Loads shown in table are at minimum "D" dimension, for ratings with longer "D" dimension see graph on page TK_9.***

TKS & TKB SPECIFICATIONS

LOAD DEFLECTION

X-AXIS DEFLECTION

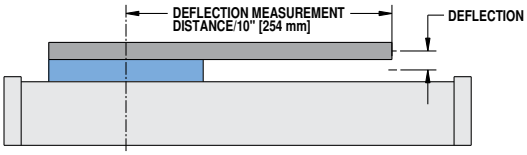

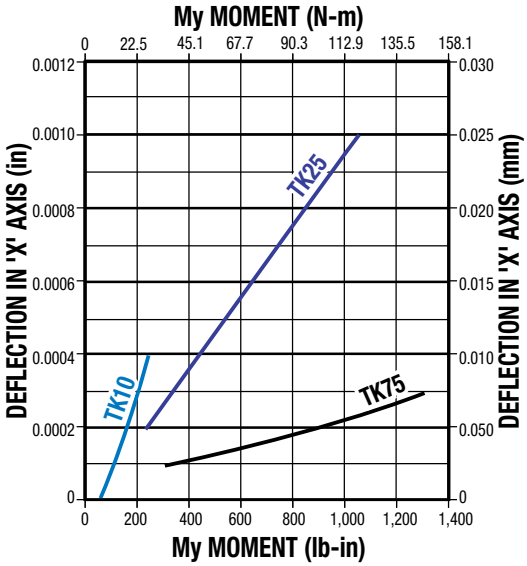

Y-AXIS DEFLECTION

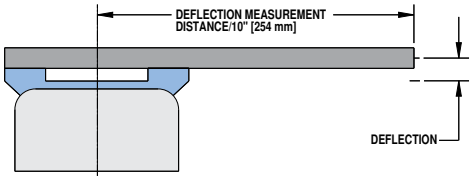

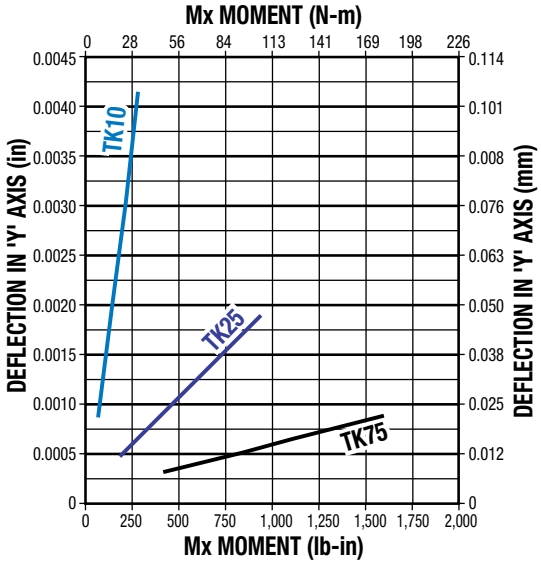

AUXILIARY CARRIER: BENDING MOMENT AT 'D' DISTANCE

DYNAMIC BENDING MOMENT

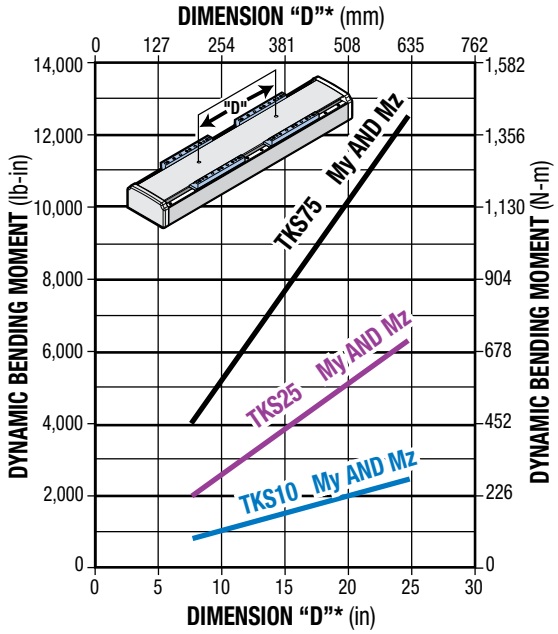

STATIC BENDING MOMENT

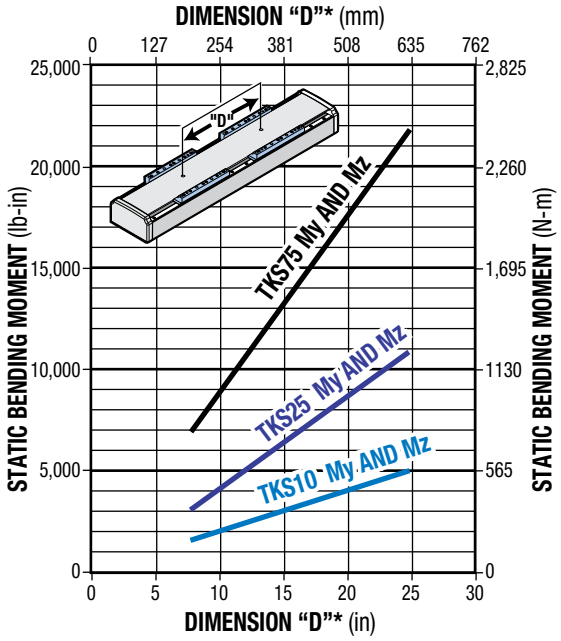

Rates shown on charts were calculated with these assumptions:
1.) Coupling between carriers is rigid.
2.) Load is equally distributed between carriers.
3.) Coupling device applies no misalignment loads to carriers.

* Customer must specify Dimension "D" (Distance between carrier center lines) in configuration string.

See page TK_8 for minimum "D" dimension.

TKS & TKB SPECIFICATIONS

BELLOWS STROKE REQUIREMENTS

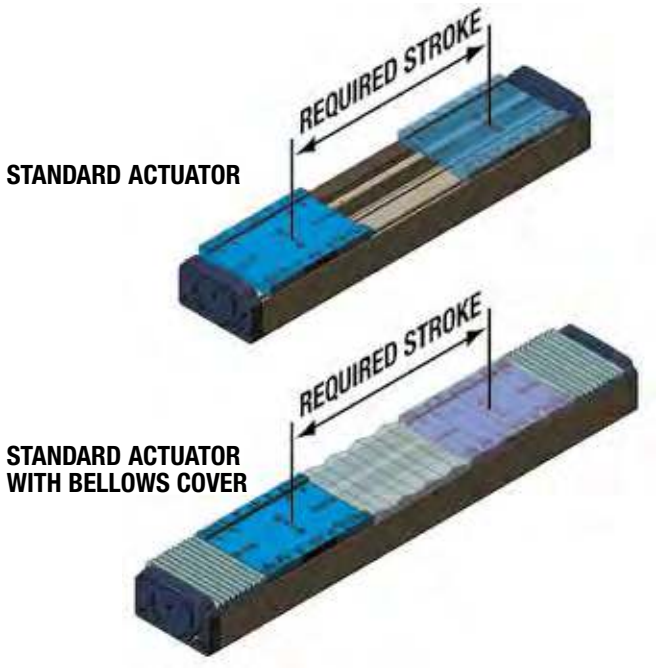

MAXIMUM AVAILABLE STROKE FOR BELLOWS OPTION

	TKS		TKB
	Ball Nut	Solid Nut	
10	610	1626	1626
25	1118	1626	1626
75	1626	1626	1626

Dimensions in millimeters

	TKS		TKB
	Ball Nut	Solid Nut	
10	24	64	64
25	44	64	64
75	64	64	64

Dimensions in inches

BELLOWS COVER OPTION INCREASES OVERALL ACTUATOR LENGTH BY 0.508 x STROKE

MOUNTING PLATE RECOMMENDATIONS

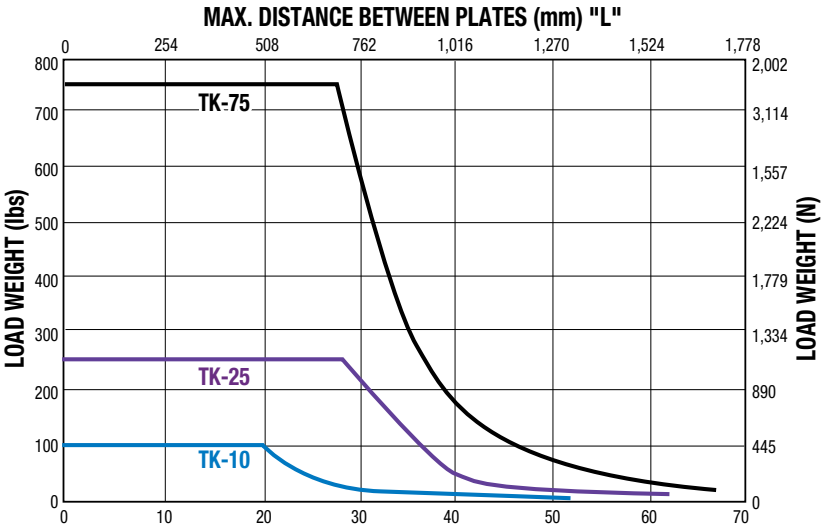

Actuator body theoretical axial deflection will not exceed .015 in (0.38 mm)

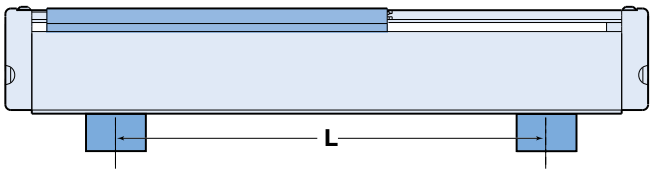

FRICTION FORCE

N = 0.003 x LOAD (kg) + 17.6

lbf = 0.0003 x LOAD (lb) + 3.96

LUBRICATION

Proper and adequate lubrication is essential for normal operation of TruTrack actuators. Poor lubrication will cause quicker wear and decrease service life of the actuator. For general use, lubrication should be performed at intervals of (100 km) 4,000,000 linear inches of travel or once every year, whichever occurs first. However, the operating conditions of certain applications may require more frequent lubrication. Please consult Tolomatic for recommendations.

Recommended greases:

- Multi-purpose grease based on refined mineral oil containing lithium thickening agent (excellent at high pressures, excellent viscosity stability).
- Grease based on a high-grade synthetic oil containing a urea thickening agent (long life, wide temperature range).

ACME SCREW/NUT COMBINATIONS

TKS ACME SCREW CRITICAL SPEED CAPACITIES

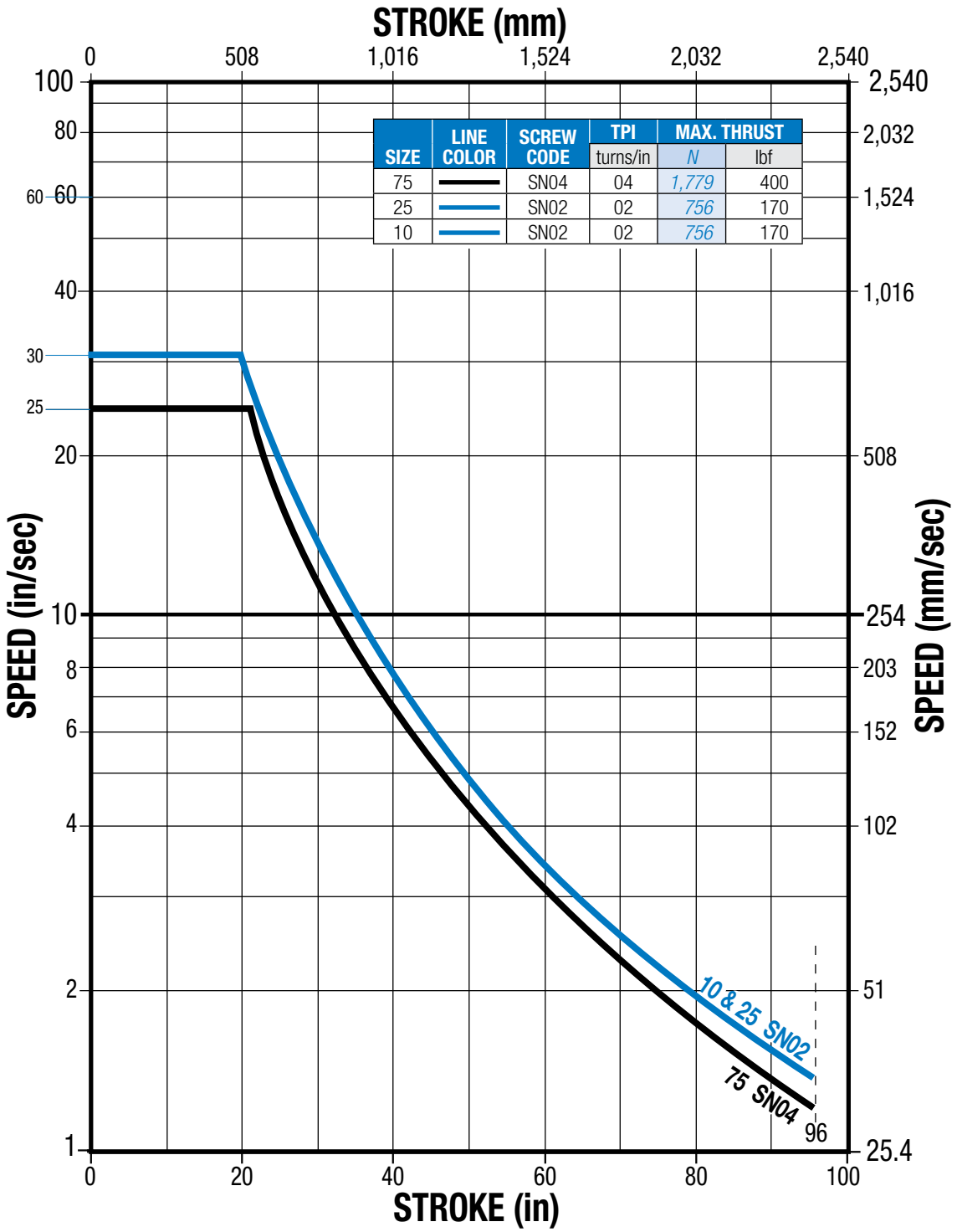

SIZE	LINE COLOR	SCREW CODE	TPI turns/in	MAX. THRUST N	MAX. THRUST lbf
75		SN04	04	1,779	400
25		SN02	02	756	170
10		SN02	02	756	170

**** For Acme screws, maximum thrust is the maximum continuous dynamic thrust subject to Thrust x Velocity limitation.***

Dashed line represents maximum stroke for screw selections.

SCREW TYPE DESCRIPTION	
SN	Solid Nut
BN	Ball Nut

ACME SCREW/NUT COMBINATIONS

TKS ACME SCREW PV LIMITS

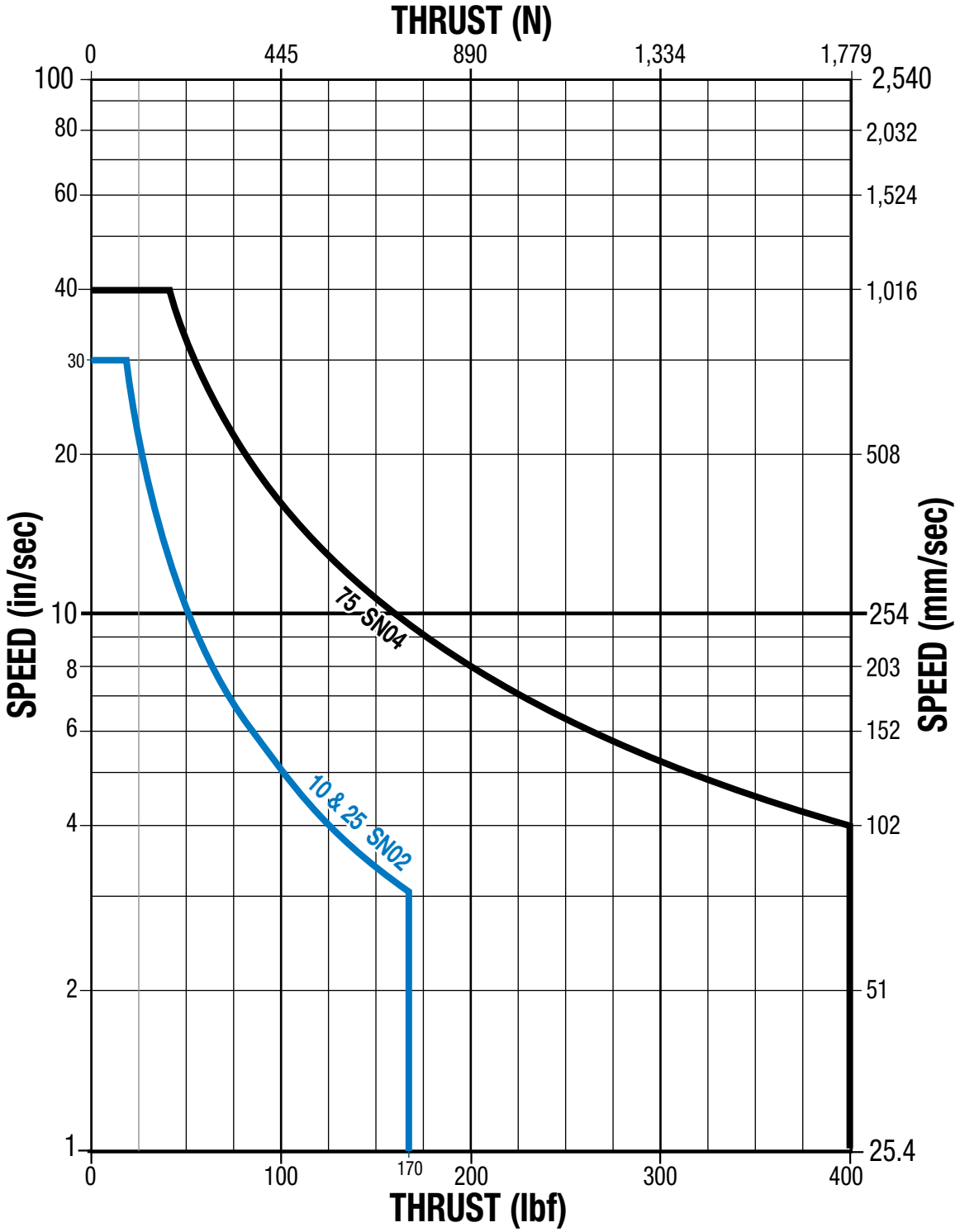

⚠ * Maximum thrust is the maximum continuous dynamic thrust subject to Thrust x Velocity Limitation.

PV LIMITS: Any material which carries a sliding load is limited by heat buildup. The factors that affect heat generation rate in an application are the pressure on the nut in pounds per square inch and the surface velocity in feet per minute. The product of these factors provides a measure of the severity of an application.

$$P \times V \leq 0.1$$

$$\left(\frac{\text{Thrust}}{\text{(Max. Thrust Rating)}}\right) \times \left(\frac{\text{Speed}}{\text{(Max. Speed Rating)}}\right) \leq 0.1$$

BALL SCREW/NUT COMBINATIONS

BALL SCREW CRITICAL SPEED CAPACITIES

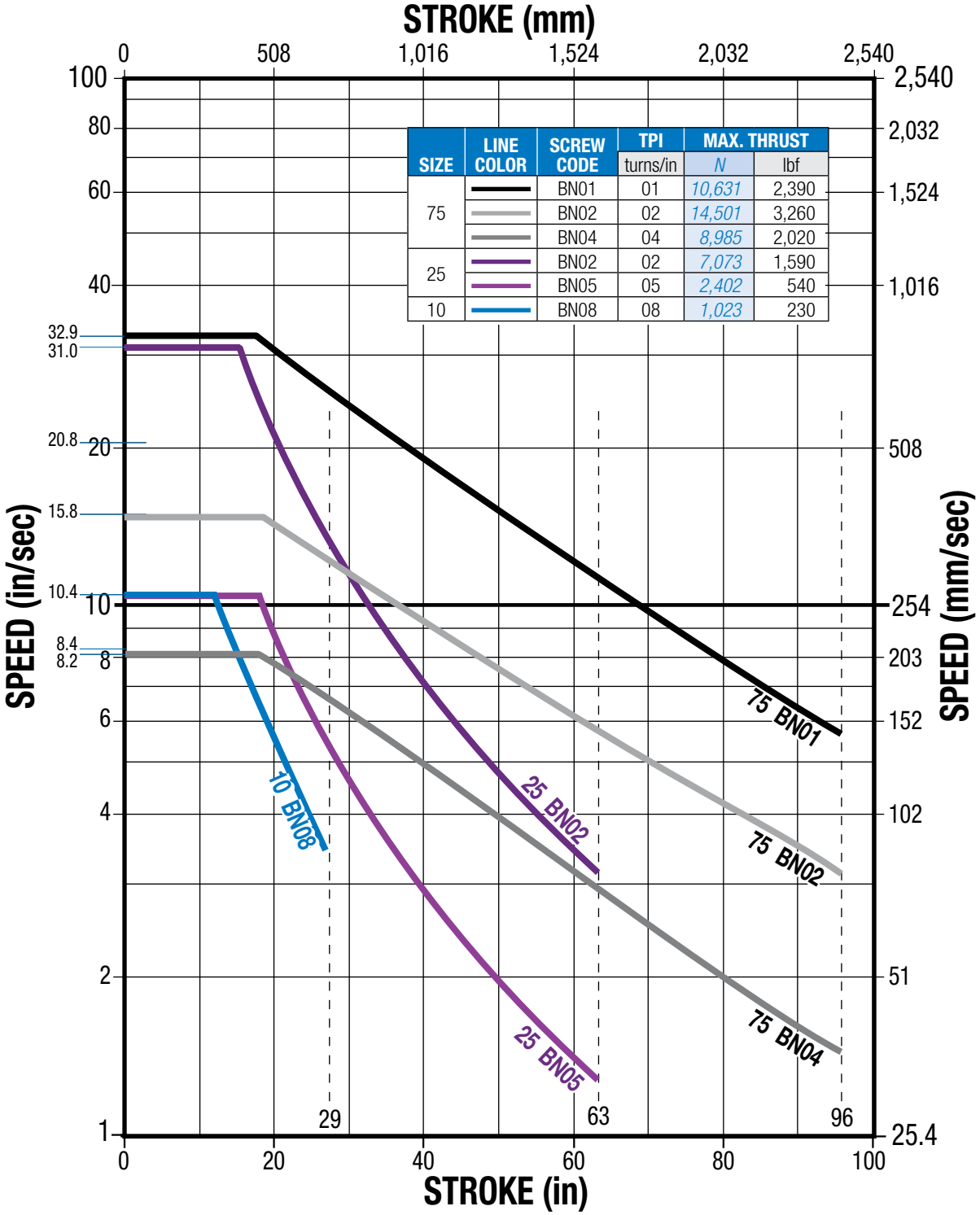

SIZE	LINE COLOR	SCREW CODE	TPI turns/in	MAX. THRUST N	MAX. THRUST lbf
75		BN01	01	10,631	2,390
		BN02	02	14,501	3,260
		BN04	04	8,985	2,020
25		BN02	02	7,073	1,590
		BN05	05	2,402	540
10		BN08	08	1,023	230

For ball screws, maximum thrust reflects 90% reliability for 25 million linear millimeters of travel.

SCREW TYPE	DESCRIPTION
BN	Ball Nut

Dashed lines represent maximum stroke for screw selections.

BALL SCREW SPECIFICATIONS

BALL SCREW LIFE CALCULATION

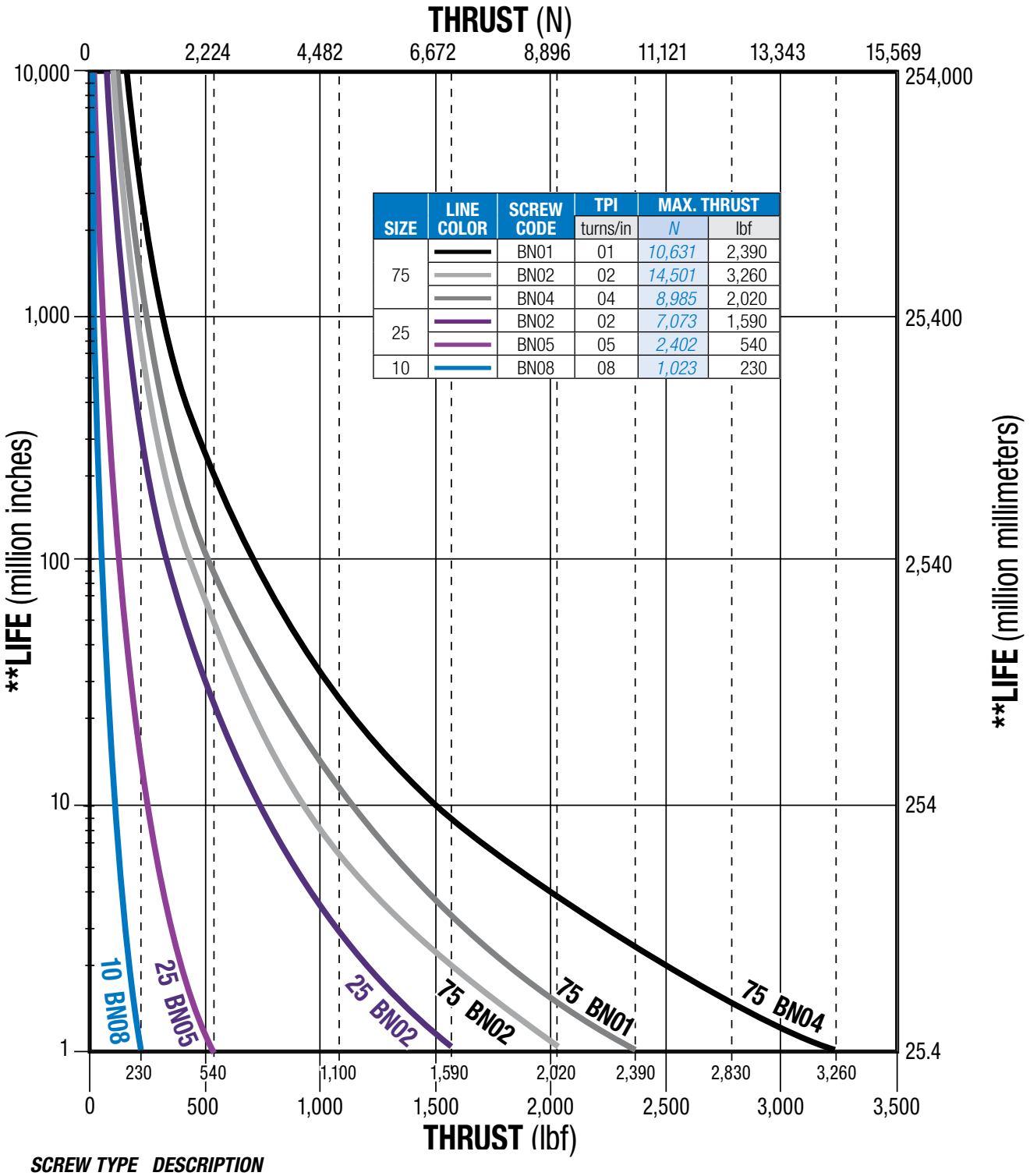

SIZE	LINE COLOR	SCREW CODE	TPI turns/in	MAX. THRUST N	MAX. THRUST lbf
75		BN01	01	10,631	2,390
		BN02	02	14,501	3,260
		BN04	04	8,985	2,020
25		BN02	02	7,073	1,590
		BN05	05	2,402	540
10		BN08	08	1,023	230

SCREW TYPE	DESCRIPTION
BN	Ball Nut

⚠ ** Maximum thrust reflects 90% reliability for 25 million linear millimeters of travel*

***Life indicates theoretical maximum life of screw only, under ideal conditions and does not indicate expected life of actuator.*

TKS SPECIFICATIONS

SPECIFICATIONS RELATED TO ACTUATOR SIZE AND SCREW SELECTION

TKS LEAD SCREWS METRIC

ACTUATOR	SCREW DIA. (in)	SCREW CODE	TPI (turns/in)	LEAD ACCURACY (mm/300)	BACKLASH (mm)	MAXIMUM THRUST* (N)	MAXIMUM STROKE (mm)	INERTIA ($kg\text{-}m^2 \times 10^{-6}$) BASE ACTUATOR In Line	INERTIA ($kg\text{-}m^2 \times 10^{-6}$) BASE ACTUATOR Rev. Parallel	INERTIA ($kg\text{-}m^2 \times 10^{-6}$) PER/in OF STROKE	BREAKAWAY TORQUE (N-m)
TKS10	0.500	SN	2	0.0762	0.1778	756	2,438	3.69	4.65	0.50	0.11
	0.375	BN	8	0.1016	0.0508	1,023	737	0.85	1.11	0.15	0.09
TKS25	0.500	SN	2	0.0762	0.1778	756	2,438	7.69	8.51	0.49	0.20
	0.500	BN	2	0.1016	0.0508	7,073	1,600	7.69	8.51	0.49	0.16
	0.625	BN	5	0.1016	0.0508	2,402	1,600	9.10	11.12	2.17	0.12
TKS75	1.000	SN	4	0.0762	0.1778	1,779	2,438	64.23	80.06	8.04	0.31
	1.000	BN	1	0.1016	0.0508	10,631	2,438	88.83	104.66	8.04	0.39
	1.000	BN	2	0.1016	0.0508	14,234	2,438	69.15	84.97	8.04	0.31
	1.000	BN	4	0.1016	0.0508	8,985	2,438	64.23	80.06	8.04	0.28

TKS LEAD SCREWS U.S. CONVENTIONAL

ACTUATOR	SCREW DIA. (in)	SCREW CODE	TPI (turns/in)	LEAD ACCURACY (in/ft)	BACKLASH (in)	MAXIMUM THRUST* (lb)	MAXIMUM STROKE (in)	INERTIA ($lb\text{-}in^2$) BASE ACTUATOR In Line	INERTIA ($lb\text{-}in^2$) BASE ACTUATOR Rev. Parallel	INERTIA ($lb\text{-}in^2$) PER/in OF STROKE	BREAKAWAY TORQUE (lb-in)
TKS10	0.500	SN	2	0.003	0.007	170	96	0.0126	0.0159	0.0017	0.938
	0.375	BN	8	0.004	0.002	230	29	0.0029	0.0038	0.0005	0.813
TKS25	0.500	SN	2	0.003	0.007	170	96	0.0263	0.0291	0.0017	1.750
	0.500	BN	2	0.004	0.002	1,590	63	0.0263	0.0291	0.0017	1.438
	0.625	BN	5	0.004	0.002	540	63	0.0311	0.0380	0.0042	1.063
TKS75	1.000	SN	4	0.003	0.007	400	96	0.2196	0.2737	0.0275	2.813
	1.000	BN	1	0.004	0.002	2,390	96	0.3037	0.3578	0.0275	3.438
	1.000	BN	2	0.004	0.002	3,260	96	0.2364	0.2905	0.0275	2.813
	1.000	BN	4	0.004	0.002	2,020	96	0.2196	0.2737	0.0275	2.500

Contact the factory for higher accuracy and lower backlash options.

***For Acme screws, maximum thrust is the maximum continuous dynamic thrust subject to Thrust x Velocity limitation. For ball screws, maximum thrust reflects 90% reliability for 25 million linear millimeters of travel.**

SCREW TYPE	DESCRIPTION
SN	Solid Nut
BN	Ball Nut

TKS SPECIFICATIONS

ACTUATOR SPECIFICATIONS

	METRIC				U.S. CONVENTIONAL			
SPECIFICATIONS		**TKS10**	**TKS25**	**TKS75**		**TKS10**	**TKS25**	**TKS75**
Carrier weight	kg	0.25	1.05	1.61	lb	0.56	2.31	3.54
Base weight (in-line model, including carrier • *motor not included*)	kg	1.46	4.29	8.14	lb	3.22	9.46	17.95
Weight per/in (mm) of stroke	kg	0.10	0.24	0.42	lb	0.229	0.527	0.932
Straightness (YX Plane) (unconstrained [1])	mm/mm	0.0004			in/in	0.0004		
Straightness (YX Plane) (constrained [2])	mm/mm	0.0002			in/in	0.0002		
Flatness (ZX Plane) (unconstrained [1])	mm/mm	0.0008			in/in	0.0008		
Flatness (ZX Plane) (constrained [2])	mm/mm	0.0002			in/in	0.0002		
Screw uni-directional repeatability [3]	mm	±0.010			in	±0.0004		
Temperature Range [4]	°C	4-54			°F	40-130		

1 ***Listed values are intended for reference purposes only, and not as an engineering standard of absolute tolerance for a given actuator. Values were derived from testing of characteristic samples of appropriate products, and indicate an expected range of deviation from a theoretical straight line in the indicated plane of carrier motion. Appropriate installation is the single most important factor in reducing such deviation, so good engineering practices such as measurement, mapping, etc. must be employed in applications with stringent straightness/flatness requirements. For more information on how these values were obtained, please read the white paper on this subject available at www.tolomatic.com.***

2 ***Actuator mounted on a flat surface and fully restrained.***

3 ***Ball screw; not including backlash***

4 ***Heat generated by the motor and drive should be taken into consideration as well as linear velocity and work cycle time. For applications that require operation outside of the recommended temperature range, contact the factory.***

LARGE FRAME MOTORS AND SMALLER SIZE ACTUATORS: Cantilevered motors need to be supported, if subjected to continuous rapid reversing duty and/or under dynamic conditions.

TKS Rodless Screw Drive Actuator

DIMENSIONS

3D CAD AVAILABLE AT WWW.TOLOMATIC.COM
ALWAYS USE CONFIGURATED CAD SOLID MODEL TO DETERMINE CRITICAL DIMENSIONS

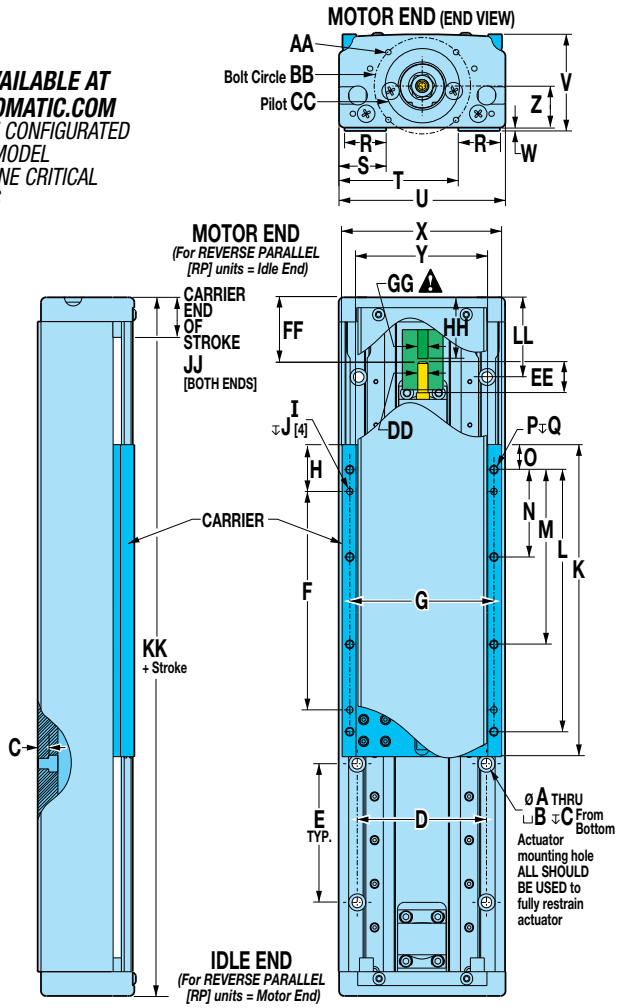

When specifying the XY/XJ shaft option: If a Tolomatic motor is not specified in the configuration string, customer's motor must conform to the shaft dimensions shown for mounting compatibility. Please specify you motor type and frame size when ordering.

NOTE: MRV motors are discontinued contact Tolomatic for equivalent replacement

SIZE	10	25	75
A	4.8	6.6	8.6
B	7.9	13.5	13.5
C	6.1	7.9	7.1
D	59.18	90.93	74.65
E	63.50	63.50	127.00
F	100.00	100.00	140.00
G	66.00	100.00	135.00
H	21.4	38.0	28.4
I	3.0	6.0	6.0
J	Thru	Thru	Thru
K	142.9	175.9	196.9
L	120.02	140.00	184.00
M	80.00	90.00	124.00
N	40.00	50.00	60.00
O	11.4	18.0	6.4
P	M4	M6	M8
Q	7.9	Thru	Thru
R	19.1	25.4	44.5
S	21.6	31.0	50.8
T	54.6	83.3	104.9
U	76.2	114.3	155.6
V	44.2	69.1	86.9
W	1.5	1.5	1.5
X	73.0	110.6	151.7
Y	60.3	85.2	119.9
Z	19.1	31.6	41.2

Dimensions in millimeters

SIZE	10			25					75	
Frame	17	23		23			34		34	
		MRS	Brushless	MRS	Brushless	Gearbox	Motor	Gearbox	Motor	Gearbox
AA	#6-32	M5	M5	M5	M5	M5	M5	M5	M5	M5
BB Ø	45.97	66.68	66.68	66.68	66.68	66.68	98.43	98.43	98.43	98.43
CC Ø	30.02	38.13	38.13	38.13	38.13	38.13	73.03	73.03	73.03	73.03
Shaft DD	4.78			8.00					12.70	
Shaft EE	17.6	19.7	14.6	35.1	19.1	25.4	33.3	26.9	18.0	
Shaft FF	29.5	29.1	34.2	37.8	48.8	42.4	34.5	40.9	48.8	
GG	8.00	6.35	12.70	6.35	12.70	12.70	12.70	12.70	12.70	12.70
HH	25.4	20.0	38.1	21.0	36.0	30.0	29.6	36.3	30.7	33.8
JJ	17.5	19.1 | 17.5		25.4					28.4	
KK	177.8	179.4		226.6					261.9	
LL	36.5	38.1		41.3					42.4	44.5

Dimensions in millimeters

SIZE	10			25					75	
Frame	17	23		23			34		34	
		MRS	Brushless	MRS	Brushless	Gearbox	Motor	Gearbox	Motor	Gearbox
AA	#6-32	M5	M5	M5	M5	M5	M5	M5	M5	M5
BB Ø	1.810	2.625	2.625	2.625	2.625	2.625	3.875	3.875	3.875	3.875
CC Ø	1.182	1.501	1.501	1.501	1.501	1.501	2.875	2.875	2.875	2.875
Shaft DD	Ø.188			Ø.315					Ø.500	
Shaft EE	0.70	0.78	0.58	1.38	0.75	1.00	1.31	1.06	0.71	
Shaft FF	1.16	1.15	1.35	1.49	1.92	1.67	1.36	1.61	1.92	
GG	0.315	0.250	0.500	0.250	0.500	0.500	0.500	0.500	0.500	0.500
HH	1.00	0.79	1.50	0.83	1.42	1.18	1.17	1.43	1.21	1.33
JJ	0.69	motor = 0.75 idle = 0.69		1.00					1.12	
KK	7.00	7.06		8.92					10.31	
LL	1.44	1.50		1.63					1.67	1.75

Dimensions in inches

SIZE	10	25	75
A	Ø.19	Ø.26	Ø.34
B	Ø.31	Ø.53	Ø.53
C	0.24	0.31	0.28
D	2.330	3.580	2.939
E	2.500	2.500	5.000
F	3.937	3.937	5.512
G	2.599	3.937	5.315
H	0.84	1.49	1.12
I	Ø.12	Ø.24	Ø.24
J	Thru	Thru	Thru
K	5.63	6.93	7.75
L	4.725	5.512	7.244
M	3.150	3.543	4.882
N	1.575	1.968	2.362
O	0.45	0.71	0.25
P	M4	M6	M8
Q	0.31	Thru	Thru
R	0.75	1.00	1.75
S	0.85	1.22	2.00
T	2.15	3.28	4.13
U	3.00	4.50	6.13
V	1.74	2.72	3.42
W	0.06	0.06	0.06
X	2.88	4.35	5.97
Y	2.38	3.35	4.72
Z	0.75	1.25	1.62

Dimensions in inches

TKS: DOUBLE C-FACE BRAKE OPTION

BRAKE FOR 23-FRAME MOTOR

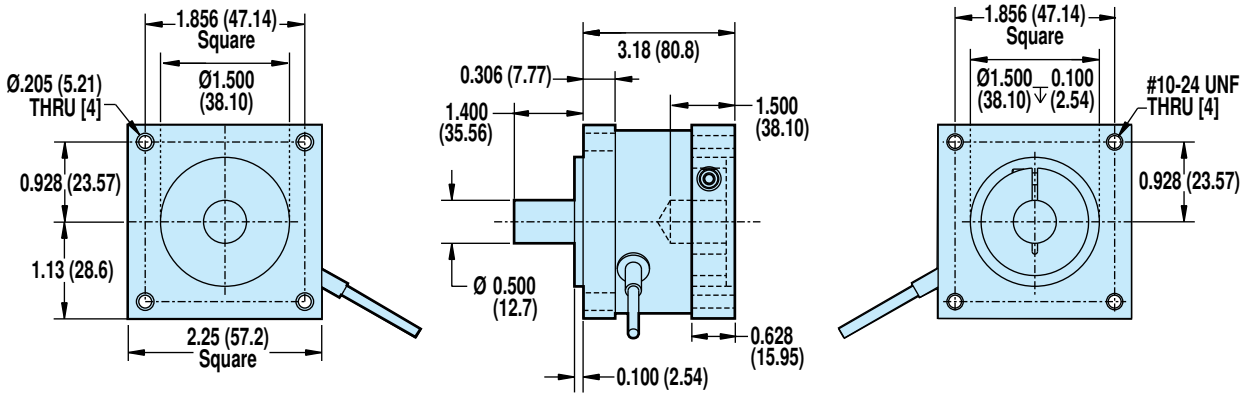

BRAKE FOR 34-FRAME MOTOR

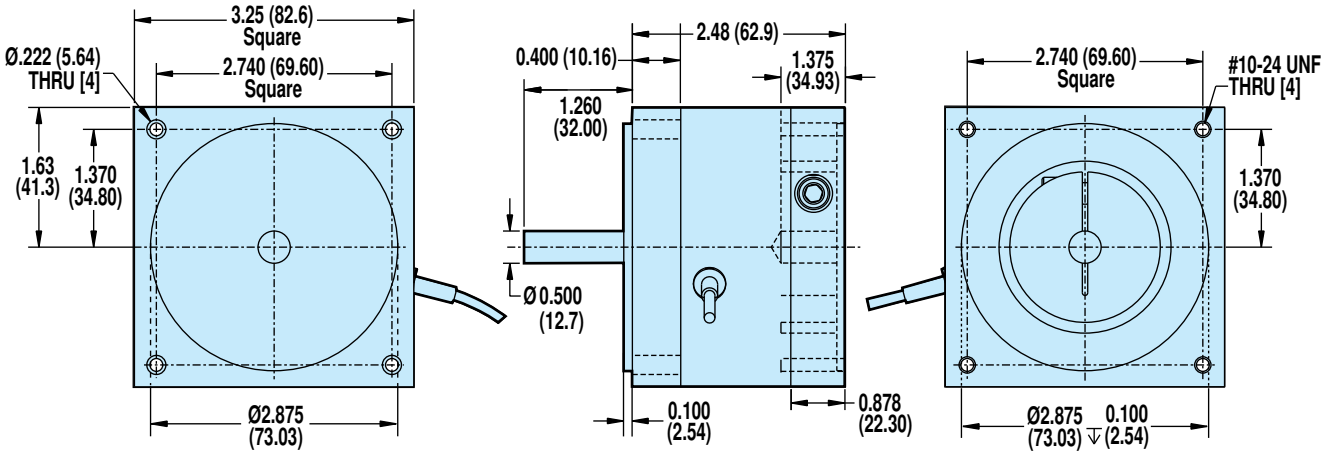

MOTOR TYPE	FRAME	BRAKE PART NO.	STATIC TORQUE	REFLECTED INERTIA	WEIGHT	VOLTAGE	CURRENT	RESISTANCE	CABLE LENGTH
			N-m	*kg-m² x 10⁻⁶*	*kg*	Vdc	Amps	Ohms	*mm*
BRUSHLESS	*23*	*3600-6286*	*1.130*	*3.66*	*0.68*	*24*	*0.286*	*83.6*	*425*
	34	*3600-6288*	*2.825*	*31.79*	*1.31*	*24*	*0.369*	*65.1*	*457*

MOTOR TYPE	FRAME	BRAKE PART NO.	STATIC TORQUE	REFLECTED INERTIA	WEIGHT	VOLTAGE	CURRENT	RESISTANCE	CABLE LENGTH
			lb-in	lb-in²	lbs	Vdc	Amps	Ohms	in
BRUSHLESS	23	3600-6286	10	0.0125	1.49	24	0.286	83.6	16.75
	34	3600-6288	25	0.1087	2.88	24	0.369	65.1	18.0

MAXIMUM BRAKE HOLDING LOADS

LEADSCREW/ NUT REDUCTION	23-FRAME BRAKE			34-FRAME BRAKE		
	INLINE	5:1 GEARBOX	10:1 GEARBOX	INLINE	5:1 GEARBOX	10:1 GEARBOX
	kg	*kg*	*kg*	*kg*	*kg*	*kg*
TKS10 with SN02	*81.6*	*81.6*	*81.6*			
TKS10 with BN08	*253.5*	*850*	*850*			
TKS25 with SN02	*81.6*	*81.6*	*81.6*	*81.6*	*81.6*	*81.6*
TKS25 with BN02	*63.5*	*409.5*	*745.2*	*158.3*	*1024.6*	*1862.8*
TKS25 with BN05	*158.3*	*1024.6*	*1817.9*	*395.9*	*1817.9*	*1817.9*
TKS75 with SN04				*190*	*190*	*190*
TKS75 with BN01				*79.3*	*512.1*	*931.2*
TKS75 with BN02				*158.3*	*1024.6*	*1862.8*
TKS75 with BN04				*316.6*	*2048.8*	*3725.3*

MAXIMUM BRAKE HOLDING LOADS

LEADSCREW/ NUT REDUCTION	23-FRAME BRAKE			34-FRAME BRAKE		
	INLINE	5:1 GEARBOX	10:1 GEARBOX	INLINE	5:1 GEARBOX	10:1 GEARBOX
	lb	lb	lb	lb	lb	lb
TKS10 with SN02	180	180	180			
TKS10 with BN08	559	1874	1874			
TKS25 with SN02	180	180	180	180	180	180
TKS25 with BN02	140	903	1643	349	2259	4107
TKS25 with BN05	349	2259	4008	873	4008	4008
TKS75 with SN04				419	419	419
TKS75 with BN01				175	1129	2053
TKS75 with BN02				349	2259	4107
TKS75 with BN04				698	4517	8213

Double C-face brakes are used for static holding (back driving prevention) and are not designed for dynamic stopping. Please contact Tolomatic if your application requires dynamic stopping. This brake can be used with other Tolomatic systems. Consult Tolomatic for availability.

NOTE: MRB & MRV motors are discontinued contact Tolomatic for information

DIMENSIONS

NOTE: MRB & MRV motors are discontinued contact Tolomatic for information

TKS10: IN-LINE MOUNT FOR 17-FRAME BRUSHLESS MOTORS

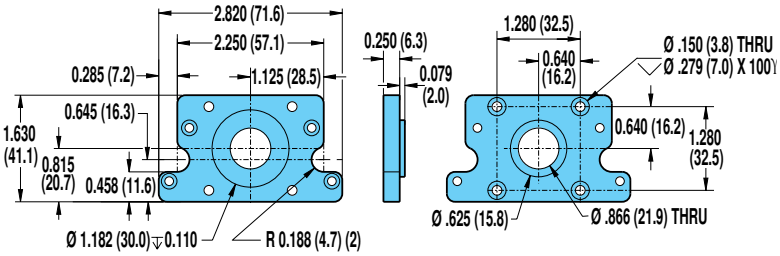

17-frame motors cannot be mounted directly to the actuator head and require the use of the motor adapter plate shown. Gearbox option is not available with 17-frame motors.

TKS10: IN-LINE MOUNT FOR 23-FRAME BRUSHLESS MOTORS OR GEARBOX

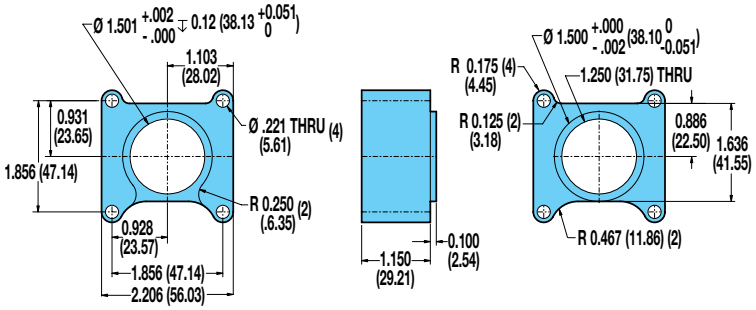

23-frame motors cannot be mounted directly to the actuator head and requires the use of the motor adapter plate shown.

TKS25: IN-LINE MOUNT FOR 34-FRAME BRUSHLESS MOTORS OR GEARBOX

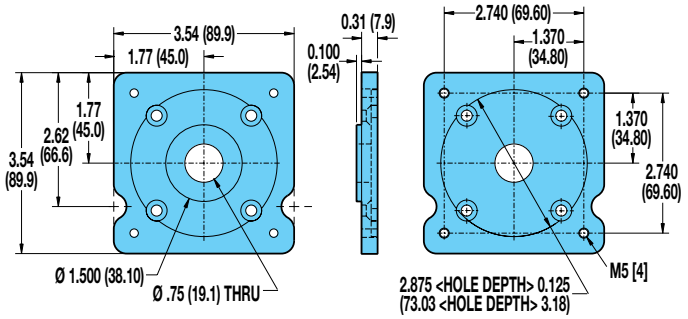

23-frame motors are mounted directly to the actuator head and require no motor adapter plates.
34-frame motors cannot be mounted directly to the actuator head and require the use of the motor adapter plate shown.

TKS75: IN-LINE MOUNT FOR 34-FRAME MOTORS OR GEARBOX

All brushless servo and gearheads may be mounted directly to the actuator head and do not require the use of motor adapter plates.

***INTERCHANGING MOTORS:** Leadscrews on TruTrack actuators are specific to the motor type specified. Motor mounting plates do not provide for interchanging servo or stepper motors. For gearhead dimensions and specifications, refer to literature #3600-4161*

DIMENSIONS

TKS: REVERSE PARALLEL MOUNTING

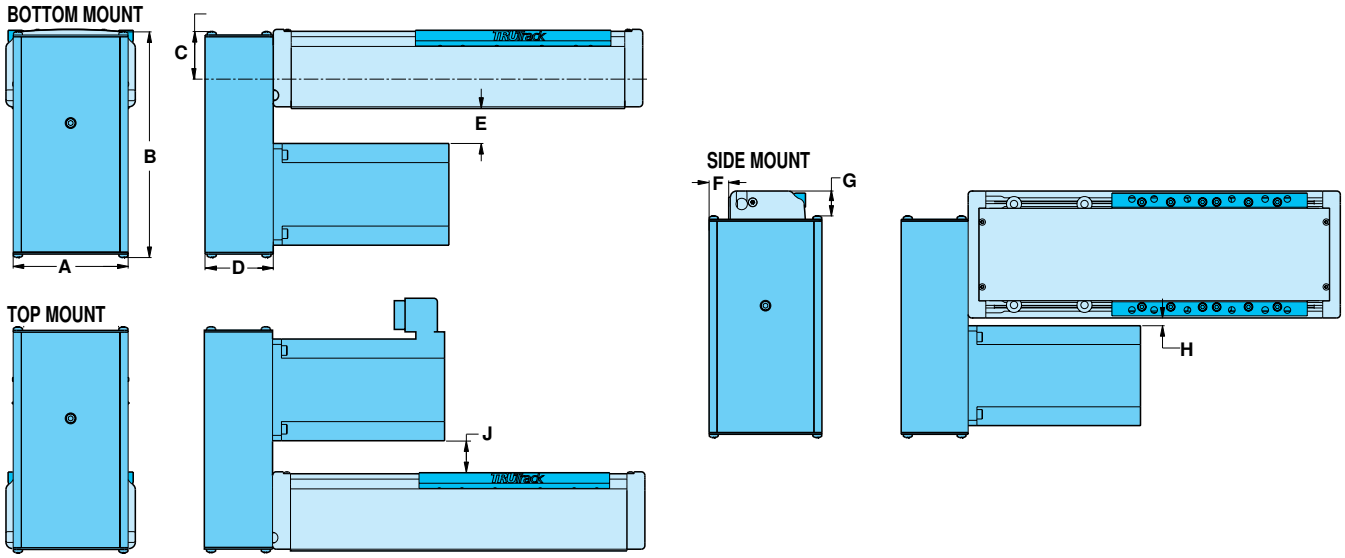

DIMENSIONS

			A	B	C	D	E	F	G	H	J
			mm	mm	mm	mm	mm	mm	mm	mm	mm
BRUSHLESS	TKS10	11, 21, 22, 23, 24 Frame Motor	82.6	144.8	32.3	54.1	24.9 23 Frame	20.8	9.7	7.4 23 Frame	21.8
BRUSHLESS	TKS25	21, 22, 23, 24 Frame	82.6	178.4	33.8	54.1	44.2	8.1	27.2	20.3	45.2
BRUSHLESS	TKS25	31, 32, 33 Frame	101.6	197.9	33.8	60.5	24.6	17.5	27.2	3.8	25.7
BRUSHLESS	TKS75	31, 32, 33 Frame Motor	101.6	228.1	45.0	101.6	34.3 34 Frame	8.1	36.8	2.0 34 Frame	32.8

DIMENSIONS

			A	B	C	D	E	F	G	H	J
			in.	in.	in.	in.	in.	in.	in.	in.	in.
BRUSHLESS	TKS10	11, 21, 22, 23, 24 Frame Motor	3.25	5.70	1.27	2.13	0.98 23 Frame	0.82	0.38	0.29 23 Frame	0.86
BRUSHLESS	TKS25	21, 22, 23, 24 Frame	3.25	7.02	1.33	2.13	1.74	0.32	1.07	0.8	1.78
BRUSHLESS	TKS25	31, 32, 33 Frame	4.00	7.79	1.33	2.38	0.97	0.69	1.07	0.15	1.01
BRUSHLESS	TKS75	31, 32, 33 Frame Motor	4.00	8.98	1.77	4.00	1.35 34 Frame	0.32	1.45	0.08 34 Frame	1.29

SPECIFICATIONS

			WEIGHT OF REDUCTION DRIVE		REDUCTION INERTIA AT MOTOR SHAFT	
			1:1	2:1	1:1	2:1
			kg	kg	kg-cm^2	kg-cm^2
BRUSHLESS	TKS10	11, 21, 22, 23, 24 Frame Motor	0.82	0.82	0.1141	0.1368
BRUSHLESS	TKS25	21, 22, 23, 24 Frame	1.14	1.24	0.1112	0.3014
BRUSHLESS	TKS25	31, 32, 33 Frame Motor	1.25	1.35	0.1112	0.3014
BRUSHLESS	TKS75	31, 32, 33 Frame Motor	1.54	1.62	0.1054	0.6628

REDUCTION EFFICIENCY: 0.95

SPECIFICATIONS

			WEIGHT OF REDUCTION DRIVE		REDUCTION INERTIA AT MOTOR SHAFT	
			1:1	2:1	1:1	2:1
			lbs	lbs	lb-in^2	lb-in^2
BRUSHLESS	TKS10	11, 21, 22, 23, 24 Frame Motor	1.80	1.80	0.039	0.047
BRUSHLESS	TKS25	21, 22, 23, 24 Frame	2.51	2.74	0.038	0.103
BRUSHLESS	TKS25	31, 32, 33 Frame Motor	2.75	2.98	0.038	0.103
BRUSHLESS	TKS75	31, 32, 33 Frame Motor	3.40	3.56	0.036	0.227

REDUCTION EFFICIENCY: 0.95

BELT PERFORMANCE

BELT FORCE AND SPEED CAPACITIES

BELT FORCE FOR TKB ACTUATORS

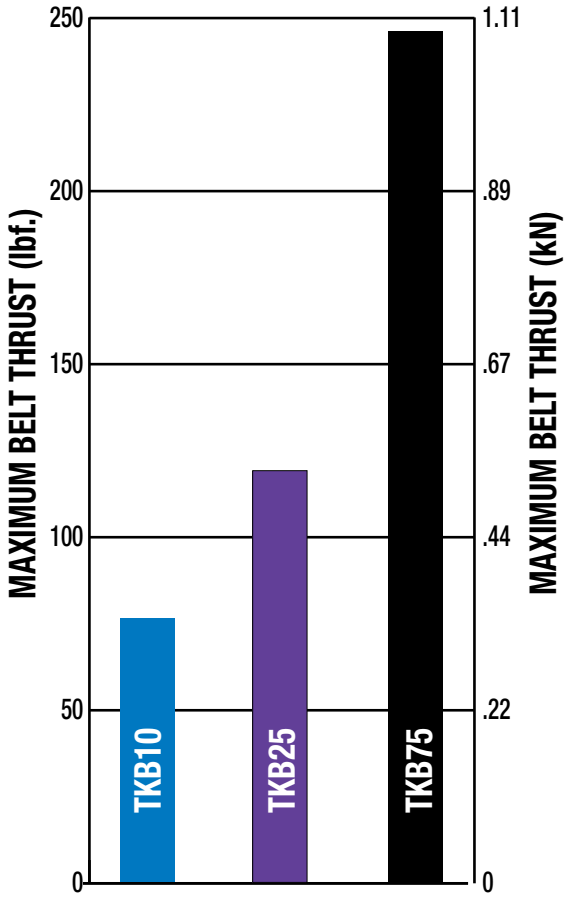

MAXIMUM BELT SPEED FOR TKB ACTUATORS

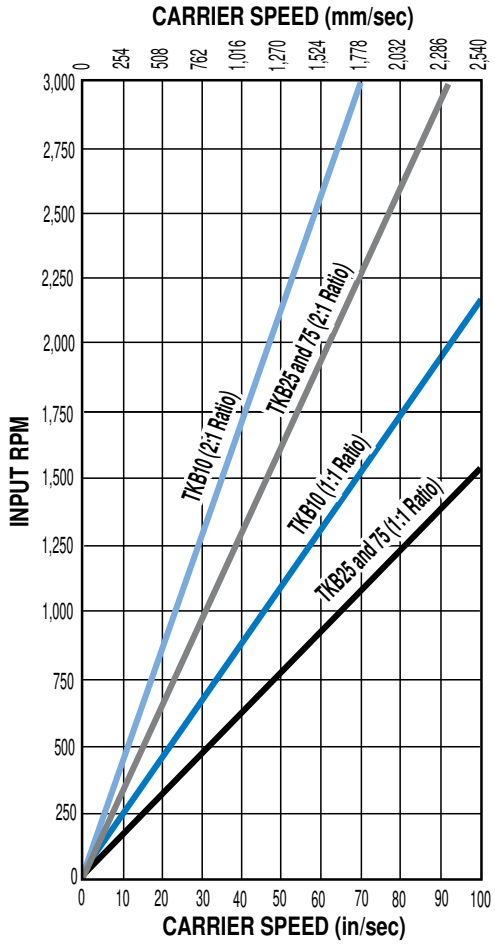

BELT SPECIFICATIONS

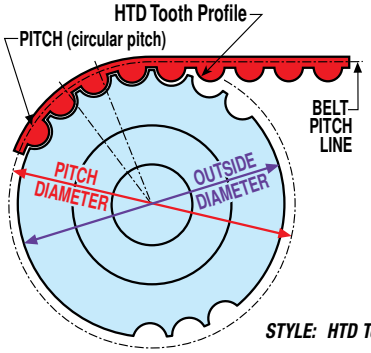

STYLE: *HTD Tooth*

TOOTH PITCH: *5mm*

BELT MATERIAL: *Polyurethane body with steel tension members*

CHARACTERISTICS:
- *For higher speed, higher load applications*
- *Heavy duty drive and idler pulley bearings*

MAX ACCELERATION

AS A FUNCTION OF CARRIER LOAD WEIGHT

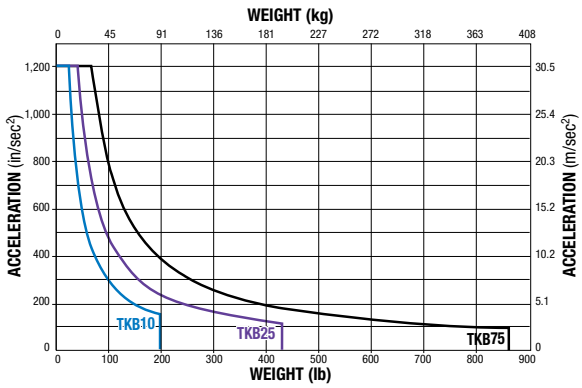

TKB SPECIFICATIONS

TKB BELT, INERTIA AND BREAKAWAY TORQUE SPECIFICATIONS

TKB ACTUATORS (METRIC MEASUREMENTS)								
	MAXIMUM STROKE	BELT WIDTH	BELT DEAD LENGTH	WHEEL PITCH DIA.	MOTION RATIO	STRAIGHTNESS & FLATNESS (mm)[1]	TEMP. RANGE[2]	BREAKAWAY TORQUE
	(mm)	(mm)	(mm)	(mm)	(mm/rev)	(Constrained)	(C°)	(N-m)
TKB10	2438	15.0	333.6	22.5	70.78	0.005	4 - 54	0.35
TKB25	2438	25.4	533.8	30.3	95.05	0.005	4 - 54	1.06
TKB75	2438	50.0	1089.8	30.3	95.05	0.005	4 - 54	1.06

TKB ACTUATORS (US STANDARD MEASUREMENTS)								
	MAXIMUM STROKE	BELT WIDTH	BELT DEAD LENGTH	WHEEL PITCH DIA.	MOTION RATIO	STRAIGHTNESS & FLATNESS (in)[1]	TEMP. RANGE[2]	BREAKAWAY TORQUE
	(in)	(in)	(in)	(in)	(in/rev)	(Constrained)	(F°)	(lb-in)
TKB10	96	0.59	15.88	0.89	2.787	0.0002	40 - 130	3.5
TKB25	96	1.00	23.12	1.19	3.742	0.0002	40 - 130	10.0
TKB75	96	1.97	25.68	1.19	3.742	0.0002	40 - 130	10.0

GENERAL ACTUATOR SPECIFICATIONS

TKB ACTUATORS (METRIC MEASUREMENTS)						
	CARRIER WEIGHT	BASE WEIGHT (inc. carrier)	WEIGHT PER (in) OF STROKE	INERTIA (kg-cm^2) BASE ACTUATOR (inc. carrier assy.)	INERTIA (kg-cm^2) PER (in) OF STROKE	REPEATABILITY
	(kg)	(kg)	(kg)			(mm)
TKB10	0.3	1.5	0.09	0.48	0.41	±0.05
TKB25	1.1	4.8	0.21	3.22	1.29	±0.05
TKB75	1.5	8.3	0.32	5.97	2.54	±0.05

TKB ACTUATORS (US STANDARD MEASUREMENTS)						
	CARRIER WEIGHT	BASE WEIGHT (inc. carrier)	WEIGHT PER (in) OF STROKE	INERTIA (lb-in^2) BASE ACTUATOR (inc. carrier assy.)	INERTIA (lb-in^2) PER (in) OF STROKE	REPEATABILITY
	(lbs)	(lbs)	(lbs)			(in)
TKB10	0.64	3.23	0.20	0.165	0.0012	±0.002
TKB25	2.41	10.69	0.46	1.100	0.0046	±0.002
TKB75	4.42	18.34	0.72	2.039	0.0090	±0.002

[1] The listed values relating to straightness/flatness are intended for reference purposes only, and not as an engineering standard of absolute tolerance for a given actuator. Appropriate installation is the single most important factor in reducing such deviation, so good engineering practices such as measurement, mapping, etc. must be employed in applications with stringent straightness/flatness requirements.

[2] Heat generated by the motor and drive should be taken into consideration as well as linear velocity and work cycle time. For applications that require operation outside of the recommended temperature range, contact the factory.

LARGE FRAME MOTORS AND SMALLER SIZE ACTUATORS: Cantilevered motors need to be supported, if subjected to continuous rapid reversing duty and/or under dynamic conditions.

DIMENSIONS

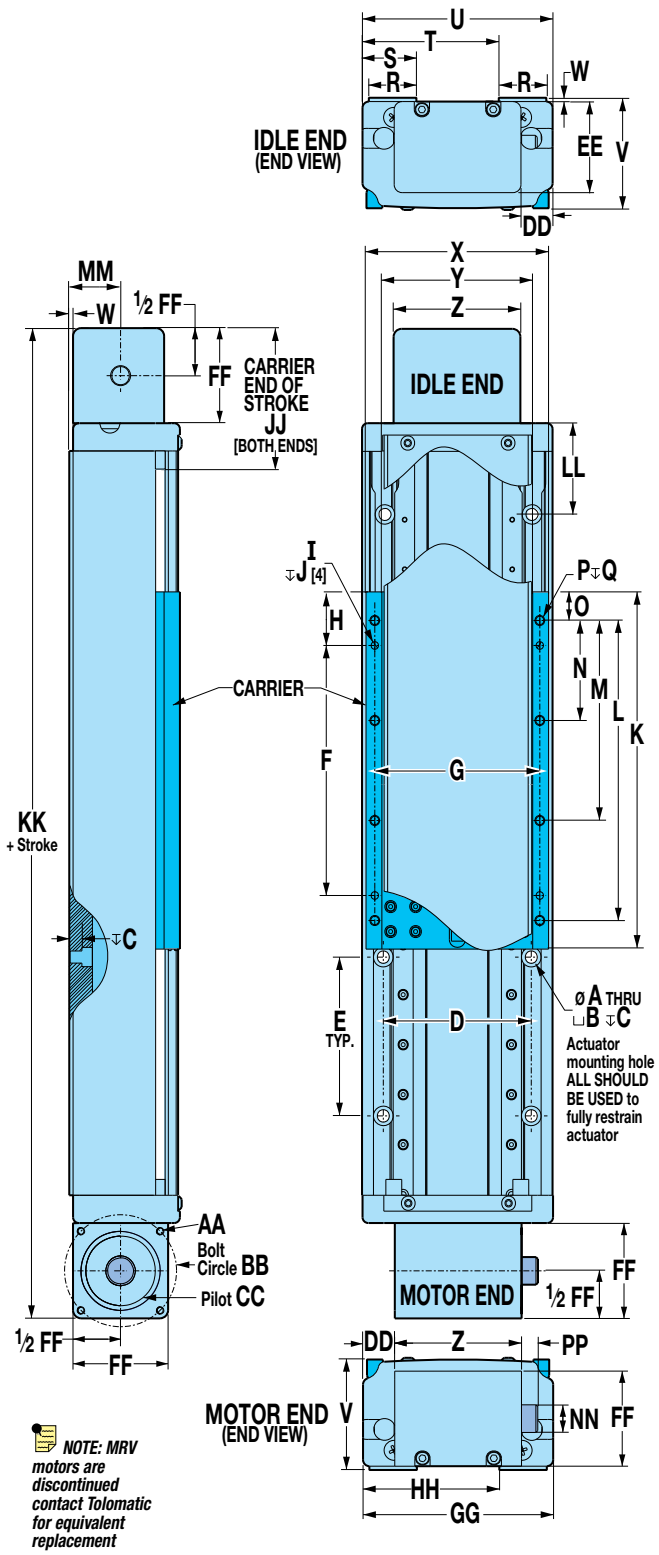

SIZE	10	25	75
A Ø	4.8	6.6	8.6
B Ø	7.9	13.5	13.5
C	4.3	23.4	8.6
D	59.18	90.93	74.65
E	63.50	63.50	127.00
F	100.00	100.00	140.00
G	66.00	100.00	135.00
H	21.4	38.0	28.4
I	3.0	6.0	6.0
J	Thru	Thru	Thru
K	142.9	175.9	196.9
L	120.02	140.00	184.00
M	80.00	90.00	124.00
N	40.00	50.00	60.00
O	11.4	18.0	6.4
P	M4	M6	M8
Q	7.9	Thru	Thru
R	19.1	25.4	44.5
S	21.6	31.0	50.8
T	54.6	83.3	104.9
U	76.2	114.3	155.6
V	44.2	69.1	86.9
W	1.5	1.5	1.5
X	73.0	110.6	151.7
Y	60.3	85.2	119.9
Z	50.8	73.0	100.0
AA	M5	M5	M5
BB	44.90	62.86	62.86
CC	31.78	44.48	44.48
DD	12.7	20.7	27.9
EE	36.5	57.2	57.2
FF	38.1	57.2	57.2
GG	76.2	114.3	155.6
HH	54.6	83.3	104.9
JJ	55.6	82.4	85.6
KK	254.0	340.9	376.1
LL	37.0	41.3	44.5
MM	20.6	36.5	47.2
NN	11.07	12.70	12.70

Dimensions in millimeters

SIZE	10	25	75
A Ø	0.19	0.26	0.34
B Ø	0.31	0.53	0.53
C	0.17	0.92	0.34
D	2.330	3.580	2.939
E	2.500	2.500	5.000
F	3.937	3.937	5.512
G	2.599	3.937	5.315
H	0.84	1.49	1.12
I	Ø.12	Ø.24	Ø.24
J	Thru	Thru	Thru
K	5.63	6.93	7.75
L	4.725	5.512	7.244
M	3.150	3.543	4.882
N	1.575	1.968	2.362
O	0.45	0.71	0.25
P	M4	M6	M8
Q	0.31	Thru	Thru
R	0.75	1.00	1.75
S	0.85	1.22	2.00
T	2.15	3.28	4.13
U	3.00	4.50	6.13
V	1.74	2.72	3.42
W	0.06	0.06	0.06
X	2.88	4.35	5.97
Y	2.38	3.35	4.72
Z	2.00	2.88	3.94
AA	M5	M5	M5
BB	1.768	2.475	2.475
CC	1.251	1.751	1.751
DD	0.50	0.81	1.10
EE	1.44	2.25	2.25
FF	1.50	2.25	2.25
GG	3.00	4.50	6.13
HH	2.15	3.28	4.13
JJ	2.19	3.25	3.37
KK	10.00	13.42	14.81
LL	1.43	1.63	1.75
MM	0.81	1.44	1.86
NN	Ø.436	Ø.500	Ø.500

Dimensions in inches

SIZE	10		25			75
FRAME	23		23		34	34
MOTOR	MRS	"MRV"	MRS	"MRV"		
PP	35.6	18.1	37.0	20.1	20.1	20.8

Dimensions in millimeters

SIZE	10		25			75
FRAME	23		23		34	34
MOTOR	MRS	"MRV"	MRS	"MRV"		
PP	1.40	0.71	1.46	0.79	0.79	0.82

Dimensions in inches

DIMENSIONS

TKB DIRECT DRIVE MOTOR MOUNTING

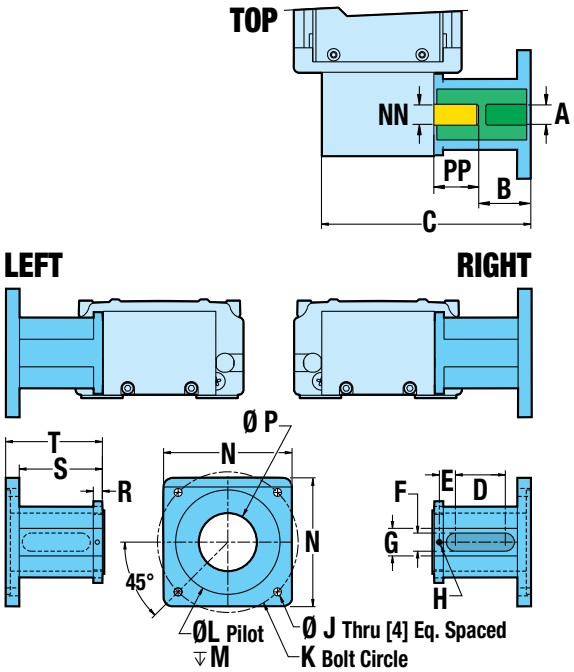

SIZE / FRAME	10	25		75
	23	23	34	34
A	-	-	-	-
B	42.34	49.17	42.82	42.19
C	117.6	1.486	1.486	157.2
D	36.8	34.9	40.6	40.6
E	8.6	11.9	9.1	9.1
F	9.5	12.7	12.7	12.7
G	19.6	19.3	19.3	19.3
H	Ø M3	Ø M3	Ø M3	Ø M3
J	M5	M5	M5	M5
K	66.68	66.68	98.43	98.43
L	38.2	38.2	73.1	73.1
M	3.3	3.3	3.3	3.3
N	57.2	57.2	89.9	89.9
P	19.1	34.3	40.6	40.6
R	6.4	6.4	6.4	6.4
S	57.3	59.8	53.4	53.4
T	66.9	69.3	62.9	62.9
NN	9.53	12.70	12.70	12.70
PP	24.51	20.14	20.14	20.75

Dimensions in millimeters

NOTE: MRB & MRV motors are discontinued contact Tolomatic for information

If a Tolomatic motor is not specified in the configuration string, customer's motor must conform to the shaft dimensions shown for mounting compatibility. Please specify your motor type and frame size when ordering.

SIZE / FRAME	10	25		75
	23	23	34	34
A	-	-	-	-
B	1.667	1.936	1.686	1.661
C	4.63	5.85	5.85	6.19
D	1.45	1.38	1.60	1.60
E	0.34	0.47	0.36	0.36
F	0.38	0.50	0.50	0.50
G	0.77	0.76	0.76	0.76
H	Ø M3	Ø M3	Ø M3	Ø M3
J	M5	M5	M5	M5
K	2.625	2.625	3.875	3.875
L	1.503	1.503	2.877	2.877
M	0.13	0.13	0.13	0.13
N	2.25	2.25	3.54	3.54
P	0.75	1.35	1.60	1.60
R	0.25	0.25	0.25	0.25
S	2.26	2.35	2.10	2.10
T	2.63	2.73	2.48	2.48
NN	Ø.375	Ø.500	Ø.500	Ø.500
PP	0.965	0.793	0.793	0.817

Dimensions in inches

TKS & TKB: MOUNTING PLATE OPTION

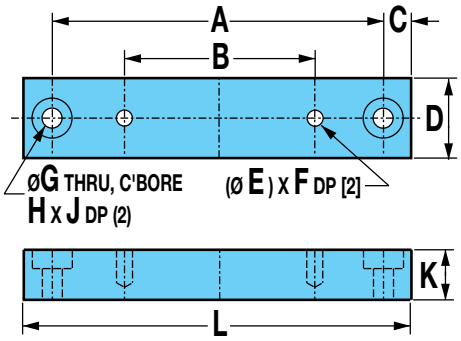

SIZE	10	25	75
A	88.90	130.18	177.80
B	59.10	90.93	74.65
C	6.4	8.0	12.7
D	19.1	25.4	25.4
E	M4x0.7	M6x1.0	M6x1.0
F	7.8	12.7	7.8
G	Ø4.8	Ø6.6	Ø8.6
H	Ø7.8	Ø11.1	Ø13.4
J	4.3	7.1	7.8
K	19.1	22.3	16.0
L	101.6	146.0	203.2

Dimensions in millimeters

SIZE	10	25	75
A	3.500	5.125	7.000
B	2.330	3.580	2.939
C	0.25	0.31	0.50
D	0.75	1.00	1.00
E	M4x0.7	M6x1.0	M6x1.0
F	0.31	0.50	0.31
G	Ø.19	Ø.26	Ø.34
H	Ø.31	Ø.44	Ø.53
J	0.17	0.28	0.31
K	0.75	0.88	0.63
L	4.00	5.75	8.00

Dimensions in inches

DIMENSIONS

TKB REDUCTION DRIVE MOTOR MOUNTING

TOP LEFT (SDTL) TOP RIGHT (SDTR) BOTTOM LEFT (SDBL) BOTTOM RIGHT (SDBR)

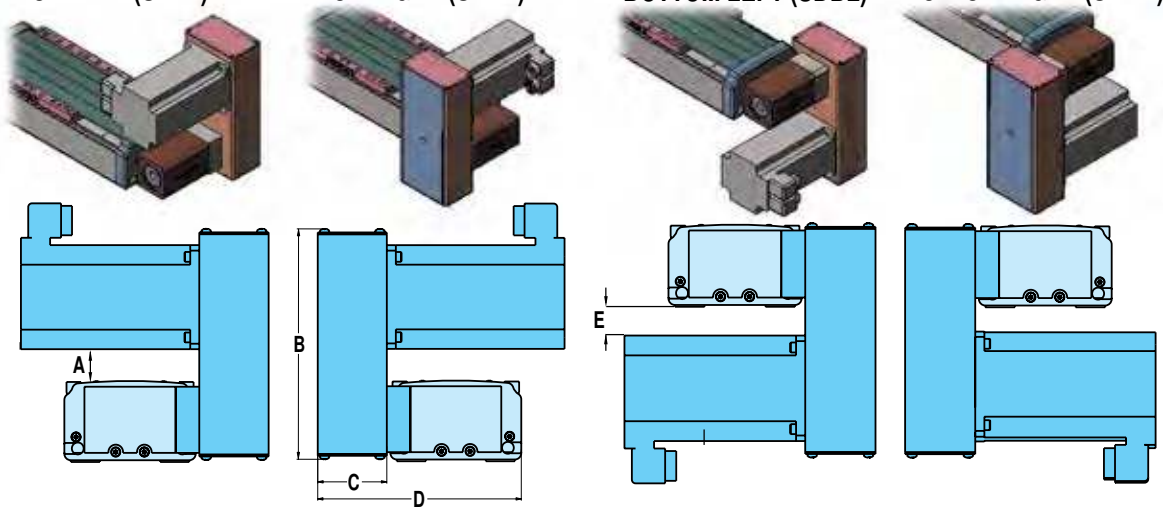

DIMENSIONS		A	B	C	D	E
10	11 Frame Motor	30.7	144.8	54.1	114.3	33.7
	21, 22, 23, 24 Frame Motor	21.9	144.8	54.1	114.3	24.9
25	21, 22, 23, 24 Frame Motor	44.9	178.3	54.1	144.1	40.8
	31, 32, 33 Frame Motor	28.5	197.9	60.5	150.4	24.4
75	31, 32, 33 Frame Motor	40.7	228.1	60.5	177.9	32.5

Dimensions in millimeters

DIMENSIONS		A	B	C	D	E
10	11 Frame Motor	1.21	5.70	2.13	4.50	1.33
	21, 22, 23, 24 Frame Motor	0.86	5.70	2.13	4.50	0.98
25	21, 22, 23, 24 Frame Motor	1.77	7.02	2.13	5.67	1.61
	31, 32, 33 Frame Motor	1.12	7.79	2.38	5.92	0.96
75	31, 32, 33 Frame Motor	1.60	8.98	2.38	7.00	1.28

Dimensions in inches

SPECIFICATIONS		WEIGHT OF REDUCTION DRIVE		REDUCTION INERTIA AT MOTOR SHAFT	
		1:1	2:1	1:1	2:1
		kg	kg	kg-cm^2	kg-cm^2
10	11, 21, 22, 23, 24 Frame Motor	0.82	0.82	0.1141	0.1368
25	21, 22, 23, 24 Frame Motor	1.16	1.26	0.1054	0.6628
	31, 32, 33 Frame Motor	1.27	1.37	0.1054	0.6628
75	31, 32, 33 Frame Motor	1.56	1.63	0.1054	0.6628

REDUCTION EFFICIENCY: 0.95

SPECIFICATIONS		WEIGHT OF REDUCTION DRIVE		REDUCTION INERTIA AT MOTOR SHAFT	
		1:1	2:1	1:1	2:1
		lbs	lbs	lb-in^2	lb-in^2
10	11, 21, 22, 23, 24 Frame Motor	1.80	1.80	0.039	0.047
25	21, 22, 23, 24 Frame Motor	2.55	2.78	0.036	0.227
	31, 32, 33 Frame Motor	2.80	3.03	0.036	0.227
75	31, 32, 33 Frame Motor	3.44	3.60	0.036	0.227

REDUCTION EFFICIENCY: 0.95

NOTE: MRB & MRV motors are discontinued contact Tolomatic for information

SWITCHES

There are 4 sensing choices: DC reed, form A (open) or form C (open or closed); Hall-effect, sourcing, PNP (open); Hall-effect, sinking, NPN (open); each with either flying leads. Commonly used to send analog signals to PLC (programmable logic controllers), TLL, CMOS circuit or other controller device. These switches are activated by the actuator's magnet.

Switches contain reverse polarity protection.

If necessary to remove factory installed switches, be sure to reinstall on the same of side of actuator with scored face of switch toward internal magnet.

SPECIFICATIONS

		REED DC		HALL-EFFECT DC	
ORDER CODE		RT	BT	TT	KT
LEAD		5M	5M	5M	5M
CABLE SHIELDING		UNSHIELDED	UNSHIELDED	UNSHIELDED	UNSHIELDED
SWITCHING LOGIC		"A" NORMALLY OPEN	"C" NORMALLY OPEN OR CLOSED	PNP (SOURCING) NORMALLY OPEN	NPN (SINKING) NORMALLY OPEN
MECHANICAL CONTACTS		SINGLE-POLE SINGLE-THROW	SINGLE-POLE DOUBLE-THROW	NO, THESE ARE SOLID STATE COMPONENTS	
COIL DIRECT		YES	YES	—	
POWER LED		NONE	NONE	NONE	NONE
SIGNAL LED		RED		RED	RED
OPERATING VOLTAGE		200 VDC MAX.	120 VDC MAX.	5 - 25 VDC	
OUTPUT RATING		—		25 VDC, 200MA DC	
OPERATING TIME		0.6 MSEC MAX. (INCLUDING BOUNCE)	0.7 MSEC MAX. (INCLUDING BOUNCE)	< 10 MICRO SEC.	
OPERATING TEMPERATURE		-40°F [-40°C] TO 158°F [70°C]		0°F [-18°C] TO 150°F [66°C]	
RELEASE TIME		1.0 MSEC. MAX.		—	
ON TRIP POINT		—		150 GAUSS MAXIMUM	
OFF TRIP POINT		—		40 GAUSS MINIMUM	
**POWER RATING (WATTS)		10.0 §	3.0 §§	5.0	
VOLTAGE DROP		2.6 V TYPICAL AT 100 MA	NA	—	
RESISTANCE		0.1 Ω INITIAL (MAX.)		—	
CURRENT CONSUMPTION		—		200 MA AT 25 VDC	
CABLE MIN. BEND RADIUS	STATIC	0.630" *[16MM]*			
	DYNAMIC	NOT RECOMMENDED			

CAUTION: DO NOT OVER TIGHTEN SWITCH HARDWARE WHEN INSTALLING!

** **WARNING**: Do not exceed power rating (Watt = Voltage X Amperage). Permanent damage to sensor will occur.

§ Maximum current 500mA (not to exceed 10VA) Refer to Temperature vs. Current graph and Voltage Derating graph

§§ Maximum current 250mA (not to exceed 3VA) Refer to Temperature vs. Current graph and Voltage Derating graph

Reed Switch Life Expectancy: Up to 200,000,000 cycles (depending on load current, duty cycle and environmental conditions)

SWITCH PERFORMANCE

TEMP. vs CURRENT, DC REED

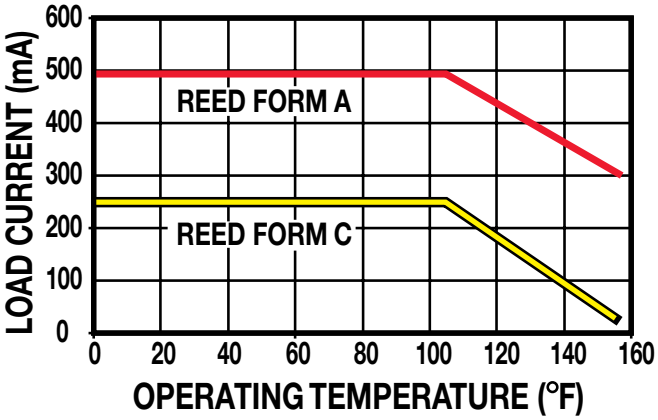

VOLTAGE DERATING, DC REED

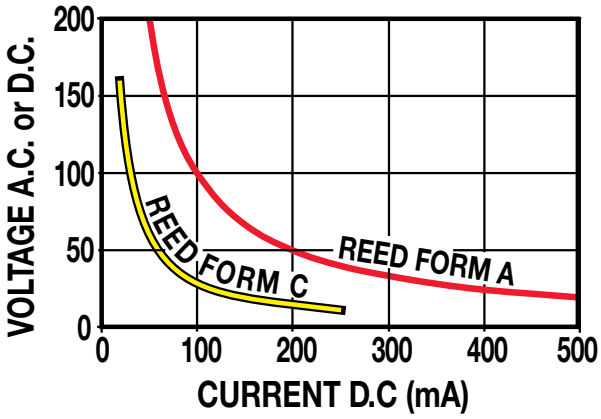

WIRING DIAGRAMS

DC REED, FORM A

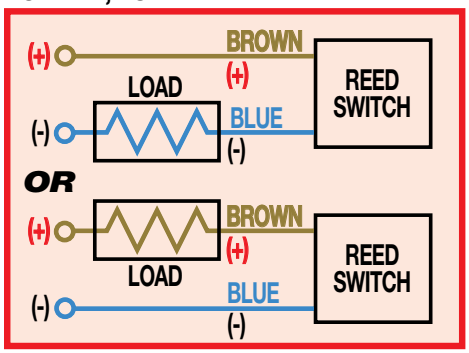

DC REED, FORM C

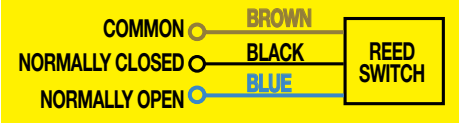

HALL-EFFECT, SOURCING, PNP

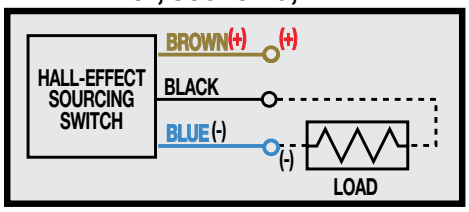

HALL-EFFECT, SINKING, NPN

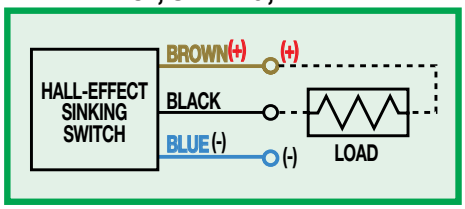

INSTALLATION INFORMATION

THE NOTCHED FACE OF THE SWITCH INDICATES THE SENSING SURFACE AND MUST FACE TOWARD THE MAGNET.

TKS

TKB

COMPILE APPLICATION REQUIREMENTS

APPLICATION DATA WORKSHEET
Fill in known data. Not all information is required for all applications

ORIENTATION

☐ Horizontal

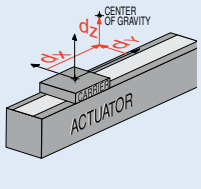

☐ Side

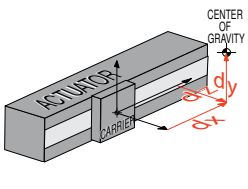

☐ Horizontal Down

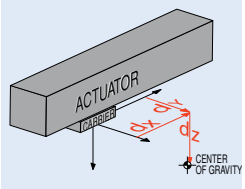

☐ Vertical

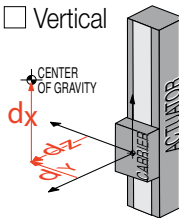

☐ Angled °

α _____

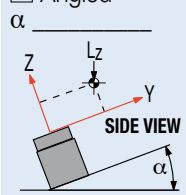

β _____

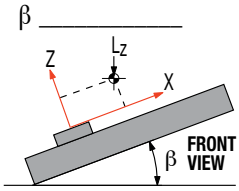

☐ Load attached to carrier OR ☐ Load supported by other mechanism

DISTANCE FROM CENTER OF CARRIER TO LOAD CENTER OF GRAVITY

d_x _____
d_y _____
d_z _____

☐ inch (U.S. Standard) ☐ millimeter (Metric)

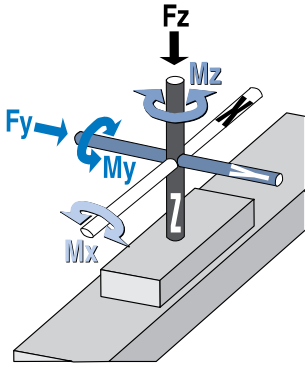

BENDING MOMENTS APPLIED TO CARRIER

M_x _____
M_y _____
M_z _____

☐ in.-lbs. (U.S. Standard) ☐ N-m (Metric)

STROKE LENGTH _____

☐ inch (SK) (U.S. Standard) ☐ millimeters (Metric)

PRECISION

Repeatability _____

☐ inch ☐ millimeters

⚠ NOTE: If load or force on carrier changes during cycle use the highest numbers for calculations

THRUST REQUIRED

F_z _____
F_y _____

☐ lbf. (U.S. Standard) ☐ N (Metric)

OPERATING ENVIRONMENT

Temperature, Contamination, etc.

_____
_____
_____

LOAD _____

☐ lb. (U.S. Standard) ☐ kg. (Metric)

MOVE PROFILE

Move Distance _____

☐ inch ☐ millimeters

Dwell Time After Move_____

Max. Speed _____

☐ in/sec ☐ mm/sec

MOVE TIME _____

☐ sec

NO. OF CYCLES _____

☐ per minute ☐ per hour

BELT DRIVE

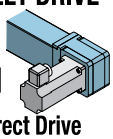

☐ Direct Drive

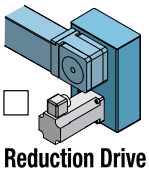

☐ Reduction Drive

SCREW DRIVE

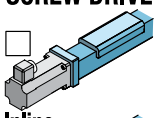

☐ Inline

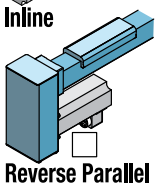

☐ Reverse Parallel

MOTION PROFILE

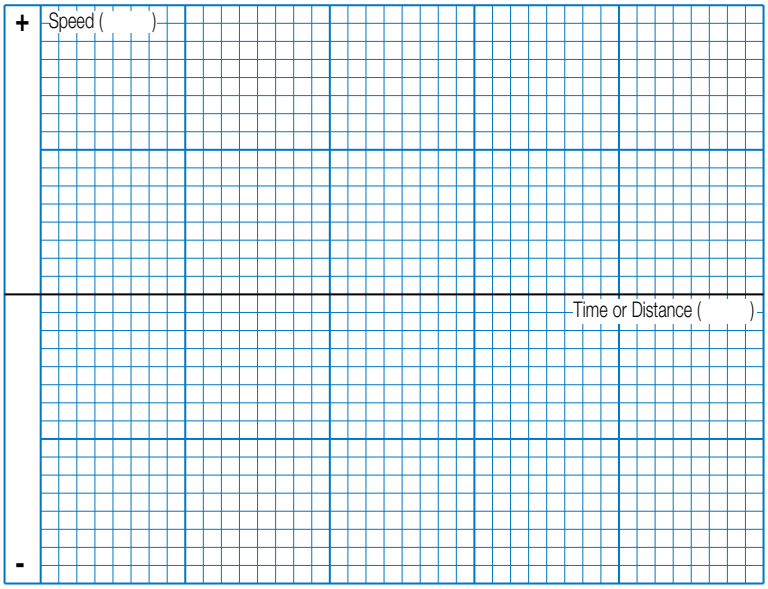

Graph your most demanding cycle, including accel/decel, velocity and dwell times. You may also want to indicate load variations and I/O changes during the cycle. Label axes with proper scale and units.

USE THE TOLOMATIC SIZING AND SELECTION SOFTWARE AVAILABLE ON-LINE AT www.tolomatic.com OR... CALL TOLOMATIC 1-800-328-2174 with the above information. We will provide any assistance needed to determine the proper MX actuator for the job.

FAX 1-763-478-8080

CONTACT INFORMATION

Name, Phone, Email _____
Co. Name, Etc. _____
_____

SELECTION GUIDELINES

The process of selecting a load bearing actuator for a given application can be complex. It is highly recommended that you contact Tolomatic or a Tolomatic Distributor for assistance in selecting the best actuator for your application. The following overview of the selection guidelines are for educational purposes only.

1 CHOOSE ACTUATOR SIZE

Choose an actuator that has the thrust, speed and moment load capacity to move the load. Use the Critical Speed graph (page TK_11&12) for the screw and the Moment and Load Capacity table (pg. TK_8) for the actuator.

2 COMPARE LOAD TO MAXIMUM LOAD CAPACITIES

Calculate the application load (combination of load mass and forces applied to the carrier) and application bending moments (sum of all moments Mx, My, and Mz applied to the carrier). Be sure to evaluate the magnitude of dynamic inertia moments. When a rigidly attached load mass is accelerated or decelerated, its inertia induces bending moments on the carrier. Careful attention to how the load is decelerated at the end of the stroke is required for extended actuator performance and application safety. If either load or any of your moments exceed figures indicated in the Moment and Load Capacity table (pg. TK_10) for the actuator consider:

1) Higher capacity bearing style

2) A larger actuator size

3) Auxiliary carrier

4) External guide system

3 CALCULATE LOAD FACTOR LF

For loads with a center of gravity offset from the carrier account for both applied (static) and dynamic loads. The load factor (L_F) must not exceed the value of 1.5

$$L_F = \frac{Mx}{Mx_{max}} + \frac{My}{My_{max}} + \frac{Mz}{Mz_{max}} + \frac{Fy}{Fy_{max}} + \frac{Fz}{Fz_{max}} \leq 1.5$$

If L_F does exceed the value of 1.5, consider the four choices listed in step #2.

4 ESTABLISH YOUR MOTION PROFILE AND CALCULATE ACCELERATION RATE

Using the application stroke length and maximum carrier velocity (or time to complete the linear motion), establish the motion profile. Select either triangular (accel-decel) or trapezoidal (accel-constant speed-decel) profile. Now calculate the maximum acceleration and deceleration rates of the move. Based on the stroke length, speed and acceleration rate, etc. select either a screw-driven (TKS) or belt-driven (TKB). In a TKS screw-driven actuator speed should not exceed the value in the critical speed capacity graph (page TK_11&12) for the screw/nut combination chosen. Also, do not exceed safe rates of dynamic inertia moments determined in step #3. In a TKB belt-driven actuator verify that the belt thrust and acceleration values to not exceed allowable limits (page TK_21.

SPEED FACTOR

FOR APPLICATIONS WITH HIGH SPEED OR SIGNIFICANT SHOCK AND VIBRATION: Calculated values of loads and bending moments must be increased by speed factor from the graph below to obtain full rated life of profiled rail bearing system.

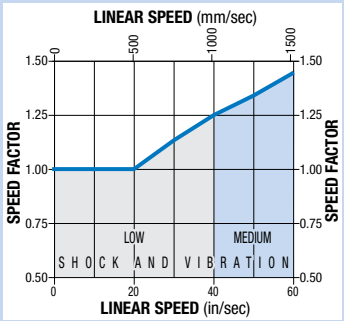

5 SELECT THE LEAD SCREW

Based on the application requirements for accuracy, backlash, quiet operation, life, etc. select the appropriate lead screw type (Acme screw with a solid nut or ball screw with a standard or anti-backlash nut) and the pitch (lead). For additional information on screw selection, consult *"Which Screw? Picking the Right Technology"* (#9900-4644) available at www.tolomatic.com.

6 SELECT MOTOR (GEARHEAD IF NECESSARY) AND DRIVE

To help select a motor and drive, use the sizing equations located in the Engineering Resources section [ENGR] to calculate the application thrust and torque requirements. Refer to Motor sections & [MRS] to determine the motor and drive.

7 DETERMINE MOUNTING PLATE REQUIREMENTS

- Consult the Support Recommendations graph for the model selected (page TK_10)
- Cross reference the application load and maximum distance between supports
- Select the appropriate number of mounting plates if required for motor and adapter clearance.

8 CONSIDER OPTIONS

- BE2 Bellows for ingress protection
- LU Low dust generating grease
- BRK In-line mounted brake
- Switches - Reed, Solid State PNP or NPN, all available normally open or normally closed

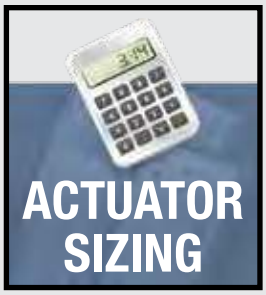

sizeit.tolomatic.com **for fast, accurate actuator selection**

ACTUATOR SIZING

ORDERING

BASE MODEL SPECIFICATIONS — **OPTIONS SPECIFICATIONS**

TKS 75 BN02 SK55 LMB DC18 KT2 BE2 BRK MP4

MODEL

TKS TruTrack Screw Drive Actuator

PAYLOAD LIMITS

10 37 kg **25** 93 kg **75** 280kg

NUT/SCREW CONFIGURATION

MODELS

SOLID NUT / PITCH (turn/in)	SERIES
SN02	TKS10, 25
SN04	TKS75

BALL NUT / PITCH (turn/in)	SERIES
BN01	TKS75
BN02	TKS25, 75
BN04	TKS75
BN05	TKS25
BN08	TKS10

STROKE LENGTH

SK Stroke, then enter desired stroke length in decimal inches

MODEL		MAX STROKE*(mm)
TKS10	Ball Nut	736
	Solid Nut	2,438
TKS25	Ball Nut	1,600
	Solid Nut	2,438
TKS75	Ball/Solid Nut	2,438

*Actuator cover has maximum stroke of 1,219 mm

MOTOR MOUNTING / REDUCTIONS

The length on the leadscrew and coupling device is determined by motor selection. Motor type and frame size must be specified when ordering.

(must choose one)

LMI In-Line mount
LMB In-Line mount with brake
LMG In-Line mount with gearhead
RPL1 1:1 Reverse-Parallel mount left
RPR1 1:1 Reverse-Parallel mount right
RPB1 1:1 Reverse-Parallel mount bottom
RPT1 1:1 Reverse-Parallel mount top
RPL2 2:1 Reverse-Parallel mount left
RPR2 2:1 Reverse-Parallel mount right
RPB2 2:1 Reverse-Parallel mount bottom
RPT2 2:1 Reverse-Parallel mount top

When the LMB option is selected, the configurator picks the appropriate screw and hardware to accommodate the mounting of the brake based on motor selection. The brake option "BRK" must also be indicated in the configuration string.

When the LMG option is selected, the configurator picks the appropriate screw and hardware to accommodate the mounting of the gearhead based on motor selection. A gearhead reduction must also be indicated in the configuration string. Please reference the motor ordering pages for available options.

AUXILIARY CARRIER

DC_ _ Auxiliary Carrier, then center-to-center spacing desired in decimal inches. (Center-to-Center spacing will add to overall dead length and will not subtract from the stroke length

SWITCHES

RT_ Reed Switch (Form A) with 5-meter lead, and quantity desired
BT_ Reed Switch (Form C) with 5-meter lead, and quantity desired
KT_ Hall-effect Sinking Switch with 5-meter lead, and quantity desired
TT_ Hall-effect Sourcing Switch with 5-meter lead, and quantity desired
SP*_ Sensor Package

*Includes: Two Form C reed switches w/5-meter leads, mounted 1" from end-of-stroke and one Hall-effect sinking switch w/5-meter lead, mounted 2" from end-of-stroke on motor end.

BELLOWS

BE2 Bellows option (increases the dead length of the actuator, see pg. TK_12

BRAKE OPTION

BRK In-line mounted brake***

Used with the LMB in-line mounting option.

MOUNTING PLATES

MP_ Mounting Plates plus quantity desired

Not all codes listed are compatible with all options.

Use Tolomatic Sizing Software to determine available options and accessories based on your application requirements.

FIELD RETROFIT KITS

ITEM	TKS10	TKS25	TKS50	TKS75
Mounting Plates	0601-9803	0602-9803	0603-9803	0604-9803

TKB Rodless Belt Drive Actuator

ORDERING

BASE MODEL SPECIFICATIONS

TKB 75 SK48 SDBR2

MODEL

TKB TruTrack Belt Drive Actuator

PAYLOAD LIMITS

10 37 kg
25 93 kg
75 280 kg

STROKE LENGTH

SK Stroke, then enter desired stroke length in decimal inches

MODEL		MAX STROKE*(mm)
TKB	All Sizes	2,438

*Actuator cover has maximum stroke of 1,219 mm

MOTOR MOUNTING / REDUCTIONS

(must choose one)

DIRECT DRIVE

SDL Direct Drive - Left
SDR Direct Drive - Right

⚠ ***A motor size and code must be selected when specifying a 1:1 or 2:1 reduction.***

REDUCTION DRIVE

SDTL1 1:1 Reduction Drive / Top Left
SDTR1 1:1 Reduction Drive / Top Right
SDBL1 1:1 Reduction Drive / Bottom Left
SDBR1 1:1 Reduction Drive / Bottom Right
SDTL2 2:1 Reduction Drive / Top Left
SDTR2 2:1 Reduction Drive / Top Right
SDBL2 2:1 Reduction Drive / Bottom Left
SDBR2 2:1 Reduction Drive / Bottom Right

OPTIONS SPECIFICATIONS

DC18 KT2 BE2 MP4

AUXILIARY CARRIER

DC_ _ Auxiliary Carrier, then center-to-center spacing desired in decimal inches. (Center-to-Center spacing will add to overall dead length and will not subtract from the stroke length

SWITCHES

RT_ Reed Switch (Form A) with 5-meter lead, and quantity desired
BT_ Reed Switch (Form C) with 5-meter lead, and quantity desired
KT_ Hall-effect Sinking Switch with 5-meter lead, and quantity desired
TT_ Hall-effect Sourcing Switch with 5-meter lead, and quantity desired
SP*_ Sensor Package

*Includes: Two Form C reed switches w/5-meter leads, mounted 1" from end-of-stroke and one Hall-effect sinking switch w/5-meter lead, mounted 2" from end-of-stroke on motor end.

BELLOWS

BE2 Bellows option (increases the dead length of the actuator, see pg. TKB_8

MOUNTING PLATES

MP_ Mounting Plates plus quantity desired

⚠ ***Not all codes listed are compatible with all options.***

Use Tolomatic Sizing Software to determine available options and accessories based on your application requirements.

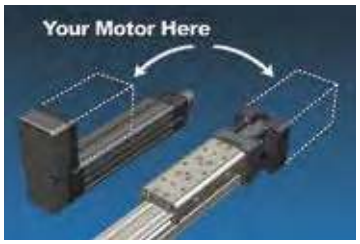

"YOUR MOTOR HERE" MADE-TO-ORDER MOTOR MOUNTS. 15 DAYS.

- Select a high-performance Tolomatic electric actuator and we'll provide a motor-specific interface for your motor. With our online database, you can select from over 60 motor manufacturers and hundreds of models.

Visit **www.tolomatic.com/ymh** to find your motor/actuator match!

FIELD RETROFIT KITS

ITEM	TKB10	TKB25	TKB50	TKB75
Mounting Plates	0601-9803	0602-9803	0603-9803	0604-9803

The Tolomatic Difference Expect More From the Industry Leader:

Tolomatic designs and builds the best standard products, modified products & unique custom products for your challenging applications.

The fastest delivery of catalog products... Electric products are built-to-order in 15 or 20 days; Pneumatic & Power Transmission products in 5 days.

Online sizing that is easy to use, accurate and always up-to-date. Find a Tolomatic electric actuator to meet your requirements.

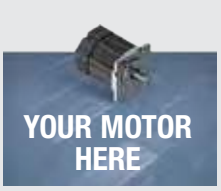

Match your motor with compatible mounting plates that ship with any Tolomatic electric actuator.

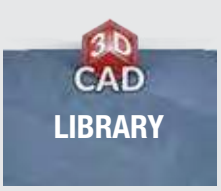

Easy to access CAD files available in the most popular formats to place directly into your assembly.

Our people make the difference! Expect prompt, courteous replies to all of your application and product questions.

Also Consider These Other Tolomatic Products:

Electric Products

Rod & Guided Rod Style Actuators, High Thrust Actuators, Screw & Belt Drive Rodless Actuators, Motors, Drives and Controllers

"Foldout" Brochure #9900-9074

Pneumatic Products

Rodless Cylinders: Band Cylinders, Cable Cylinders, Magnetically Coupled Cylinders/Slides; Guided Rod Cylinder Slides

"Foldout" Brochure #9900-9075

Power Transmission Products

Gearboxes: Float-A-Shaft®, Slide-Rite®; Disc Cone Clutch; Caliper Disc Brakes

"Foldout" Brochure #9900-9076

Tolomatic
EXCELLENCE *IN MOTION*®

USA
3800 County Road 116
Hamel, MN 55340, USA
Phone: (763) 478-8000
Fax: (763) 478-8080
Toll-Free: **1-800-328-2174**
sales@tolomatic.com
www.tolomatic.com

EUROPE
Tolomatic Europe GmbH
Zeilweg 42
60439 Frankfurt am Main
Germany
Phone: +49 69-2045-7837
EuropeSales@tolomatic.com

CHINA
Tolomatic Automation Products (Suzhou) Co. Ltd.
(ServoWeld® inquiries only)
No. 60 Chuangye Street, Building 2
Huqiu District, SND Suzhou
Jiangsu 215011 - P.R. China
Phone: +86 (512) 6750-8506
Fax: +86 (512) 6750-8507
ServoWeldChina@tolomatic.com

Visit www.tolomatic.com for the most up-to-date technical information

201708251020

LITERATURE NUMBER: **3600-4179_02**